Technical Data

IR lens, f = 30 mm, 15° incl. case

Part number:

1196961

Copyright

© 2014, FLIR Systems, Inc.

All rights reserved worldwide. Names and marks appearing herein are either registered trademarks or trademarks of FLIR Systems and/or its subsidiaries. All other trademarks, trade names or company names referenced herein are used for identification only and are the property of their respective owners.

March 31, 2014, 08:21 PM

Corporate Headquarters

FLIR Systems, Inc.
27700 SW Parkway Ave.
Wilsonville, OR 97070
USA
Telephone: +1-503-498-3547

Website

http://www.flir.com

Customer support

http://support.flir.com

Legal disclaimer

Specifications subject to change without further notice. Camera models and accessories subject to regional market considerations. License procedures may apply.

Information and equipment described herein may require US Government authorization for export purposes. Diversion contrary to US law is prohibited.



Licensing and classification

Field of view (FOV)	15° × 11.25°
Minimum focus distance	1.2 m (3.93 ft.)
Focal length	30.38 mm (1.2 in.)
Spatial resolution (IFOV)	Depends on the IR resolution of the camera: 1.65 mrad for 160 × 120 pixels 1.32 mrad for 200 × 150 pixels 1.10 mrad for 240 × 180 pixels 0.82 mrad for 320 × 240 pixels
F-number	1.3
Weight	0.092 kg (0.203 lb.), incl. two lens caps
Size (L × D)	24 × 58 mm (1.0 × 2.3 in.)

Shipping information

• Lens • Lens case	
Packaging, weight	0.35 kg
Packaging, size	175 x 170 x 100 mm
EAN-13	4743254000889
UPC-12	845188000127

Camera with Lens IR f=30 mm (15°)

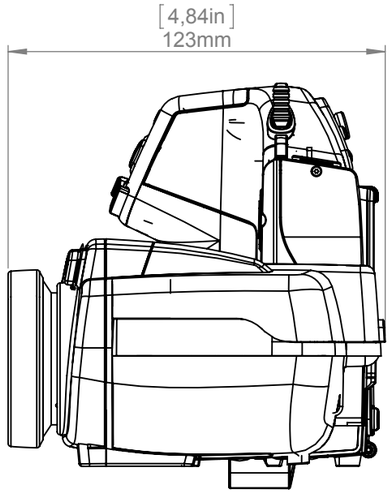

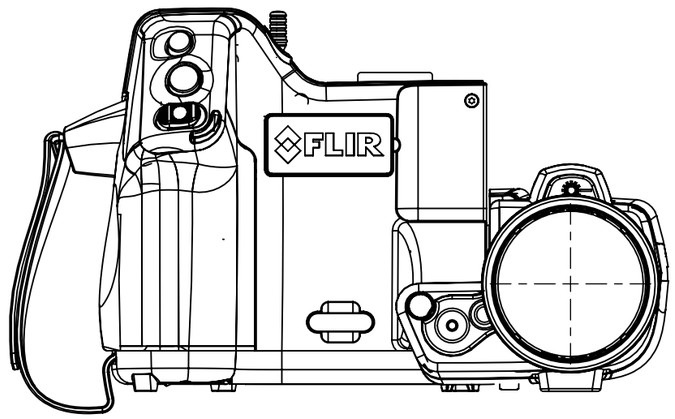

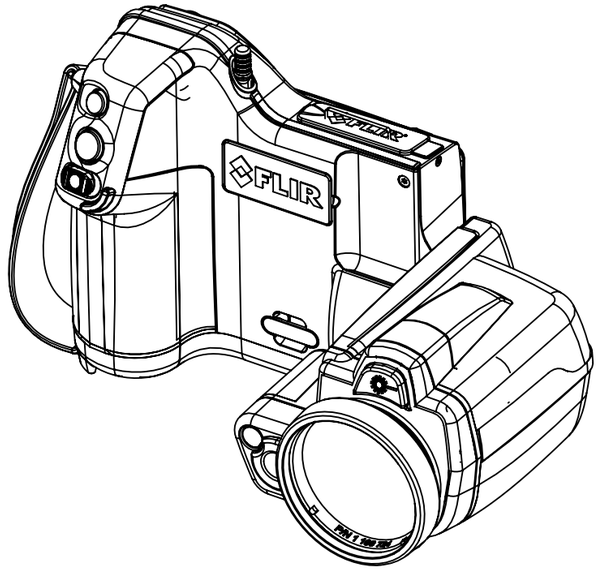

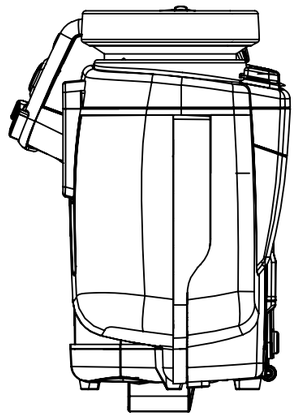

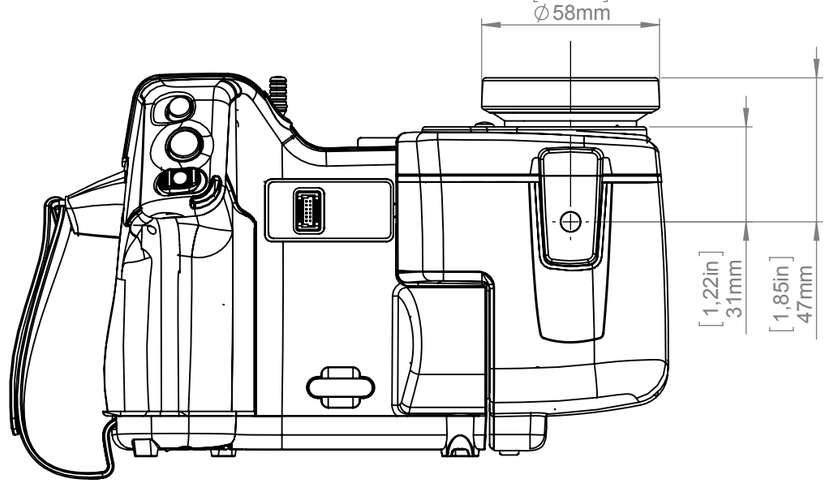

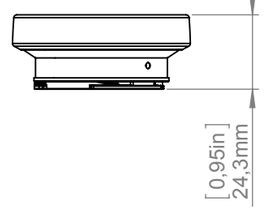

For additional dimensions see page 1

Modified	Check	Drawn by	
2012-04-18	CAHA	R&D Thermography	FLIR
Denomination: Basic dimensions FLIR Txxx/Bxxx		Size: A3	
		Scale: 1:2	Sheet: 4(7)
		Drawing No.: T197905	Size: B

© 2012, FLIR Systems, Inc. All rights reserved worldwide. No part of this drawing may be reproduced, stored in a retrieval system, or transmitted in any form, or by any means, electronic, mechanical, photocopying, recording, or otherwise, without written permission from FLIR Systems, Inc. Specifications subject to change without further notice. Dimensional data is based on nominal values. Products may be subject to regional market considerations. License procedures may apply. Product may be subject to US Export Regulations. Please refer to exportquestions@flir.com with any questions. Diversion contrary to US law is prohibited.

Camera with Lens IR f=30 mm (15°)

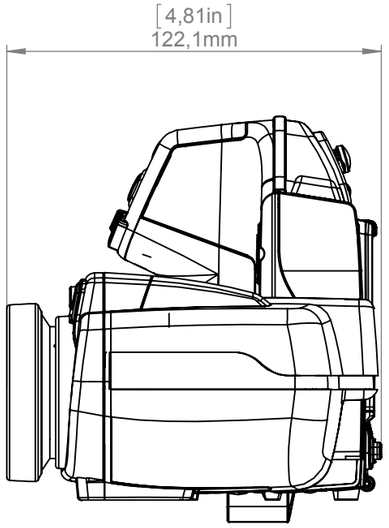

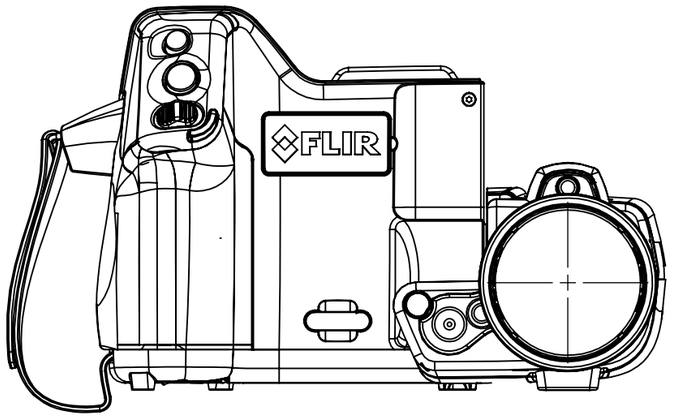

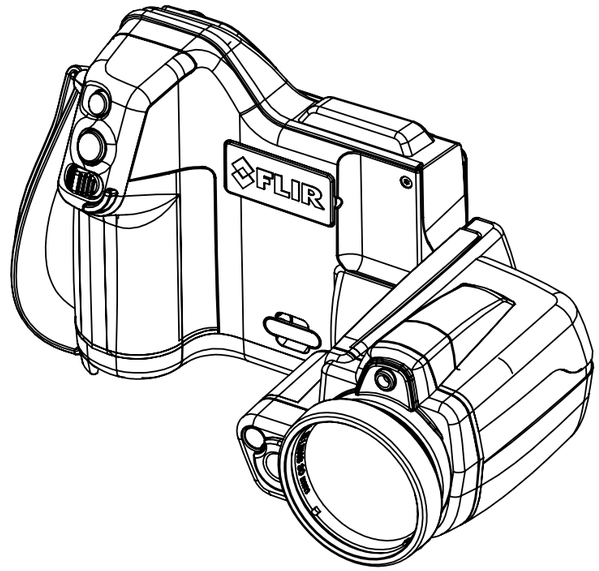

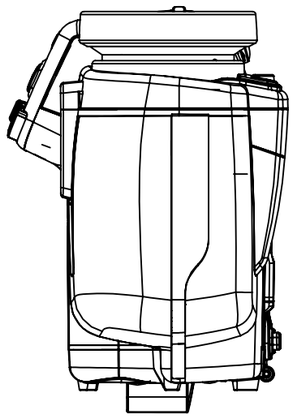

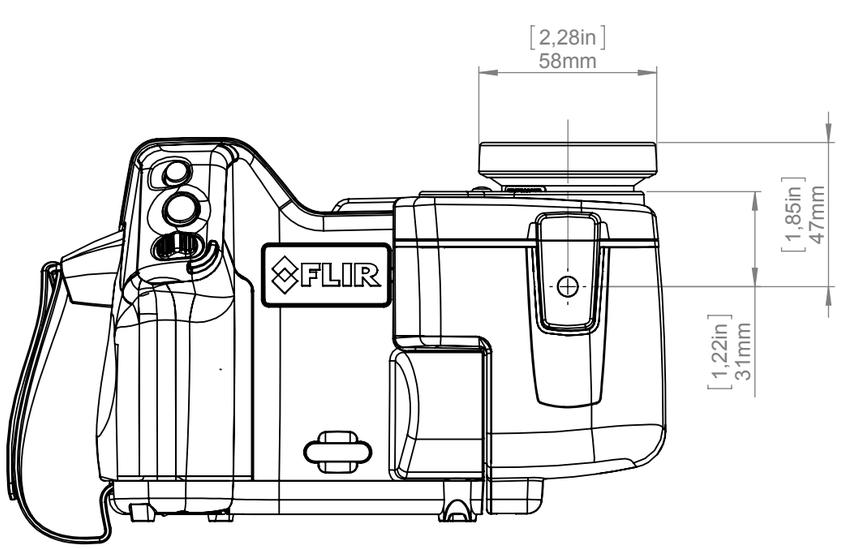

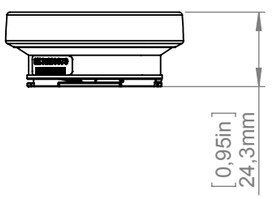

-

Modified	Check	Drawn by	
2012-06-07	JOTA	R&D Thermography	FLIR

Denomination	Size	
Basic Dimensions FLIR T4xx	A3	
	Scale 1:2	Sheet 4(7)
	Drawing No. T127604	Size A

© 2012, FLIR Systems, Inc. All rights reserved worldwide. No part of this drawing may be reproduced, stored in a retrieval system, or transmitted in any form, or by any means, electronic, mechanical, photocopying, recording, or otherwise, without written permission from FLIR Systems, Inc. Specifications subject to change without further notice. Dimensional data is based on nominal values. Products may be subject to regional market considerations. License procedures may apply. Product may be subject to US Export Regulations. Please refer to exportquestions@flir.com with any questions. Diversion contrary to US law is prohibited.

Camera with Lens IR f=30 mm (15°)

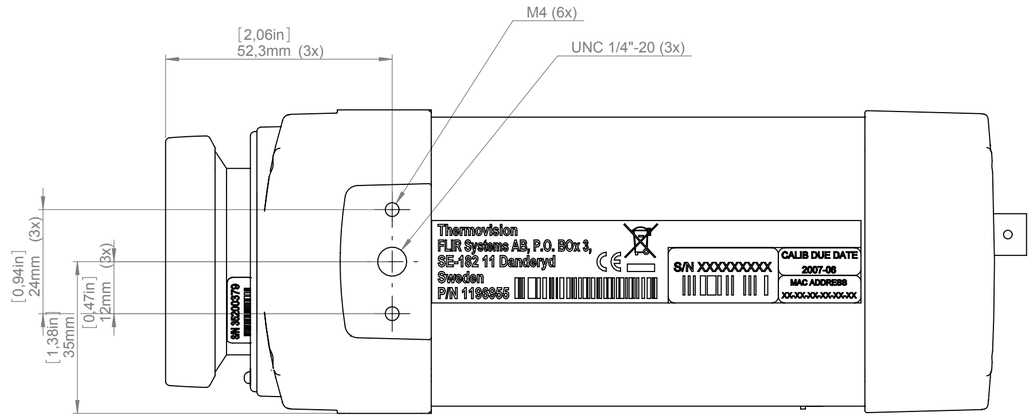

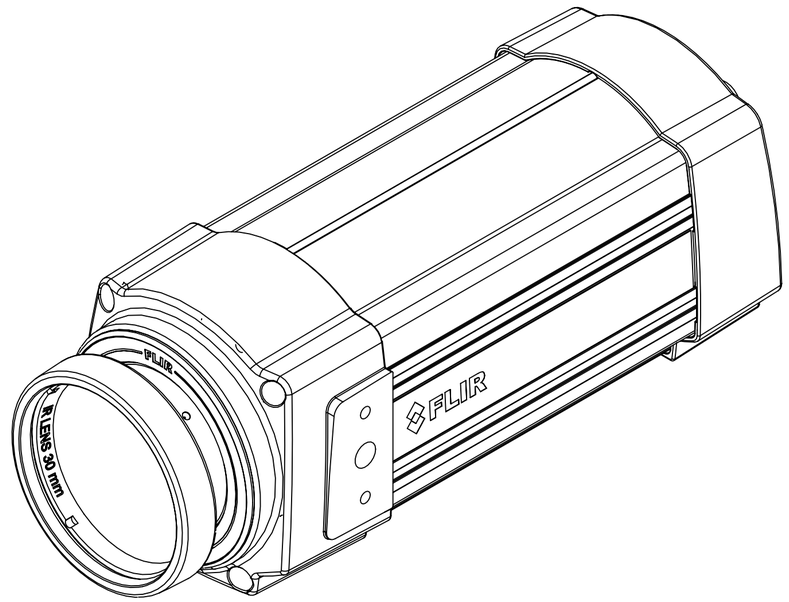

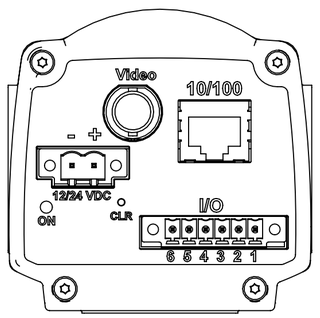

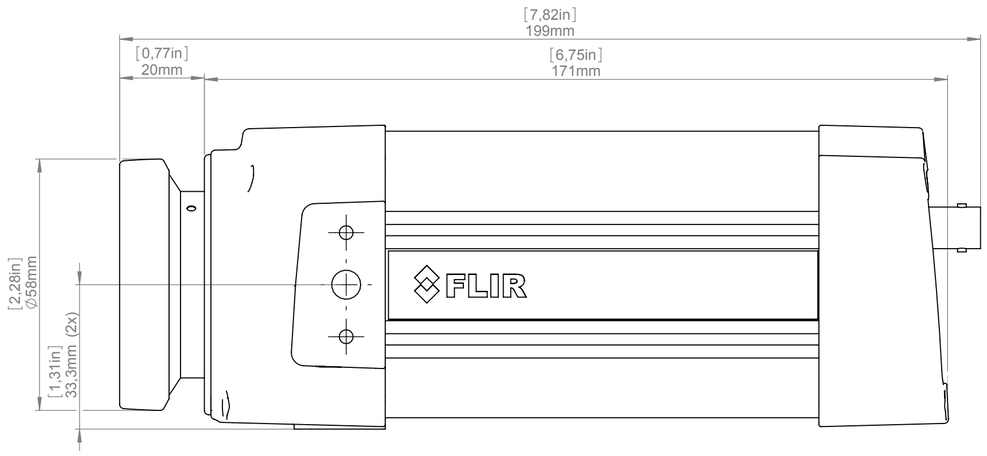

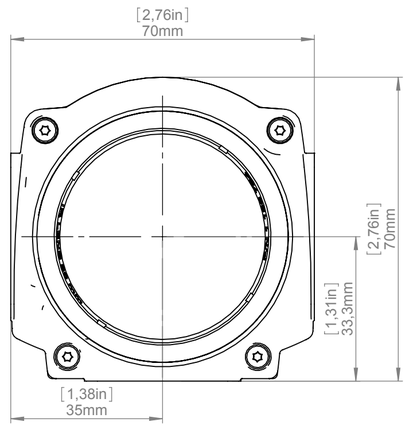

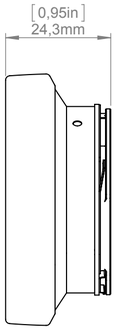

For additional dimensions see page 1

-

Modified	Check	Drawn by	
2012-04-18	CAHA	R&D Thermography	FLIR

Denomination

Basic dimensions FLIR A3xx/SC3xx

-

Size	Sheet
A3	4(8)
Scale 1:1	
Drawing No. T125002	Size A

© 2012, FLIR Systems, Inc. All rights reserved worldwide. No part of this drawing may be reproduced, stored in a retrieval system, or transmitted in any form, or by any means, electronic, mechanical, photocopying, recording, or otherwise, without written permission from FLIR Systems, Inc. Specifications subject to change without further notice. Trademark(s) is used with permission. Various patents pending. Products may be subject to regional market considerations. Product may be subject to US Export Regulations. Please refer to exportquestions@flir.com with any questions. Diversion contrary to US law is prohibited.

Camera with Lens IR f=30 mm (15°)

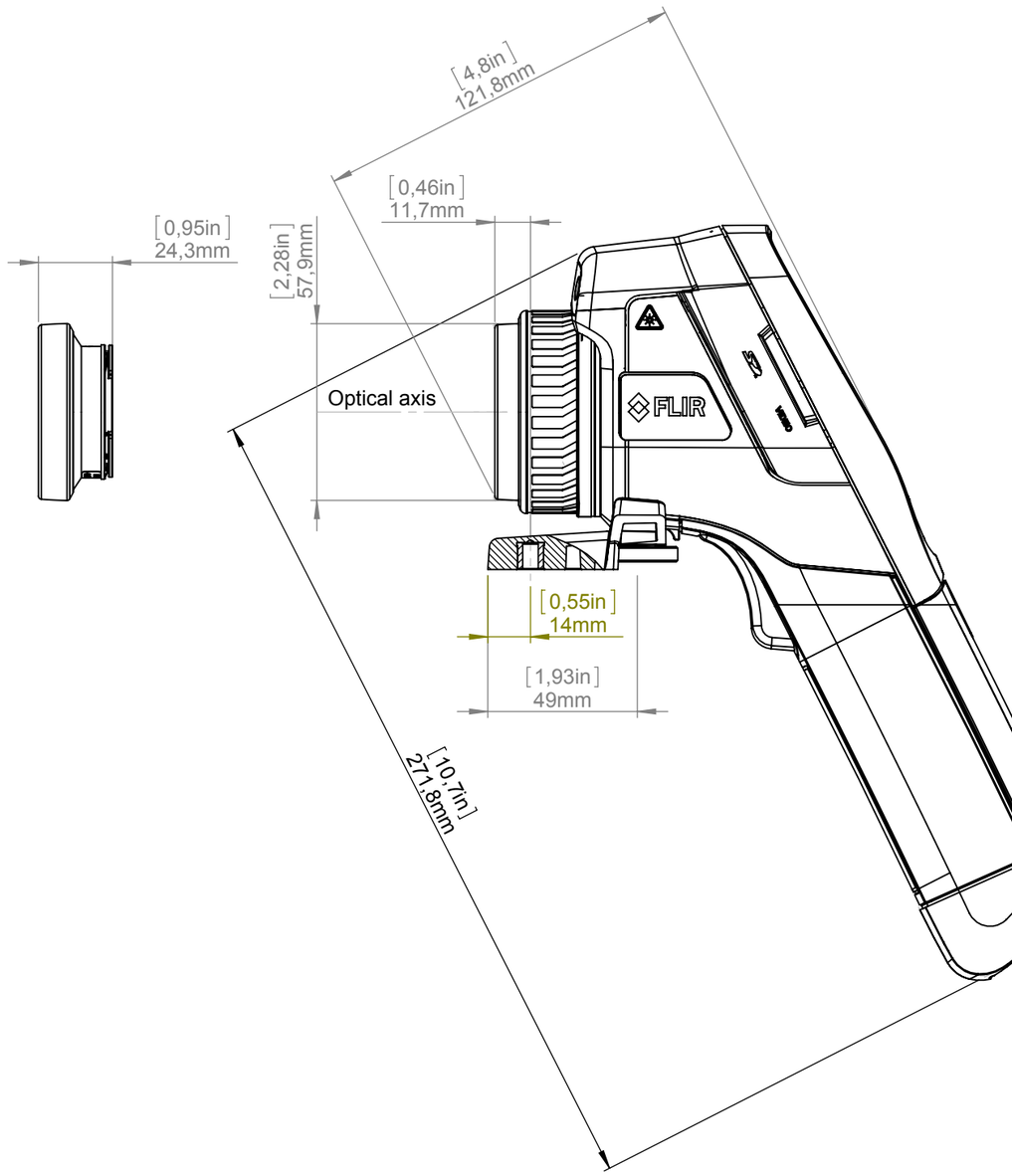

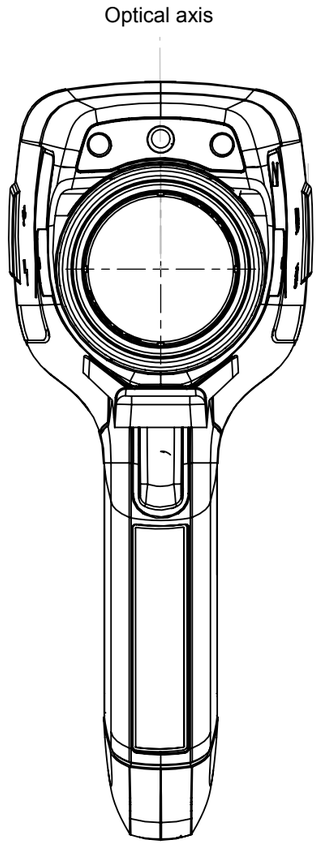

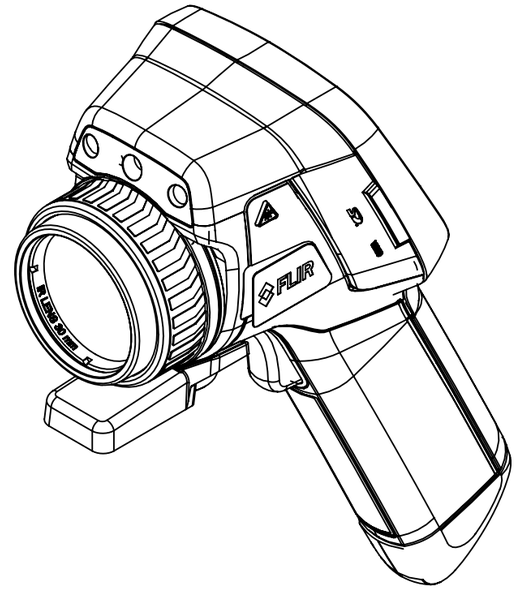

For additional dimensions see page 1

Modified	Check	Drawn by
2012-04-18	CAHA	R&D Thermography

Denomination

Basic dimensions FLIR Exx

Size	Scale	Sheet
A3	1:2	3(4)

Drawing No.	Size
T126960	A

© 2012, FLIR Systems, Inc. All rights reserved worldwide. No part of this drawing may be reproduced, stored in a retrieval system, or transmitted in any form, or by any means, electronic, mechanical, photocopying, recording, or otherwise, without written permission from FLIR Systems, Inc. Specifications subject to change without further notice. Dimensional data is based on nominal values. Products may be subject to regional market considerations. License procedures may apply. Product may be subject to US Export Regulations. Please refer to exportquestions@flir.com with any questions. Diversion contrary to US law is prohibited.