Accuride®

MODEL 117

Concealed Hinge
Flipper Door Slide®
Optional Detent-Out Feature

APPLICATIONS: Concealed doors on entertainment centers, wall units, and cabinets. Use for horizontal or vertical applications.

MODEL 117

Door Sizes:
Thickness 3/4" min.–7/8" max.
Vertical 36"H X 24"W
Horizontal 36"W X 24"H
Load Rating: Up to 25 lbs.*
Use for horizontal or vertical applications

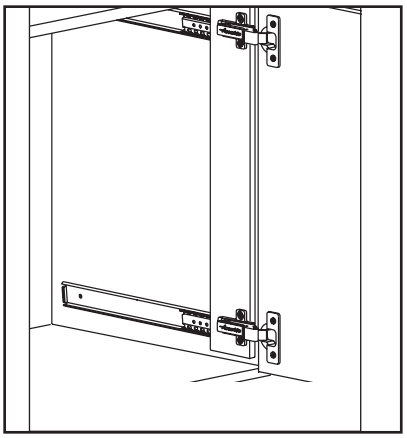

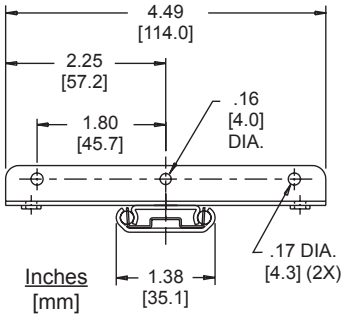

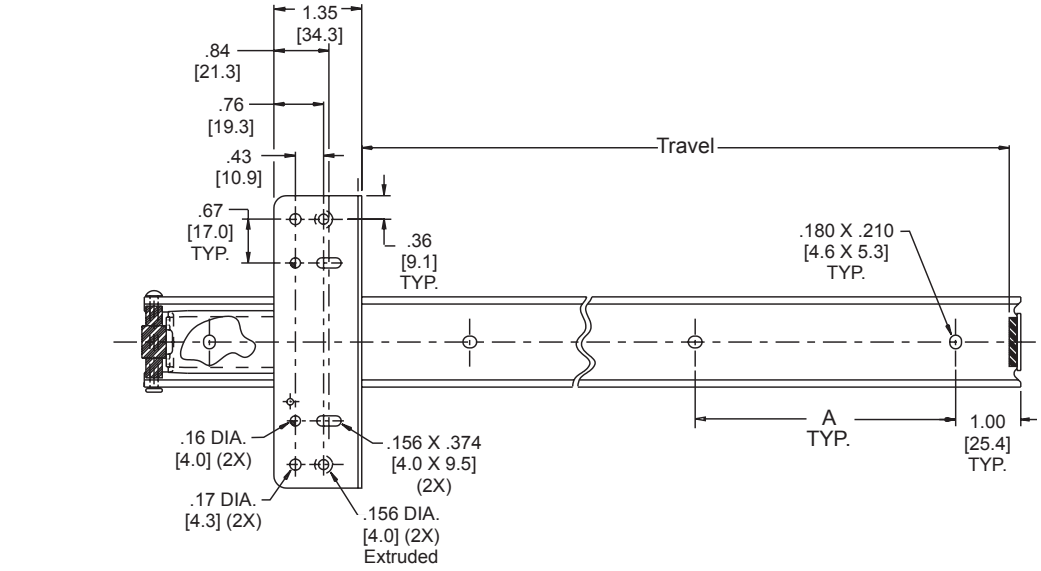

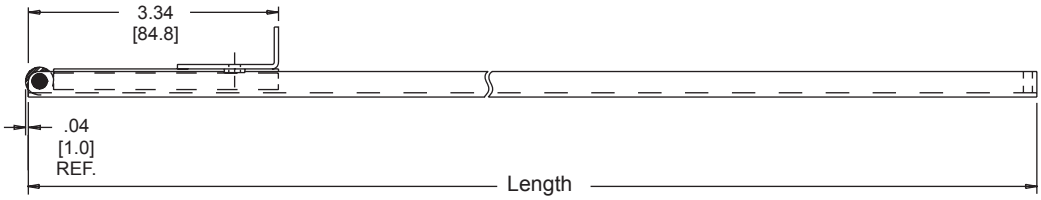

Finish Clear zinc (C) or black electroplate (CB)•

Door Sizes 3/4" [19.0 mm] thick **minimum** to 7/8" [22.2 mm] thick **maximum**.

Vertical doors 36" [914.4 mm] high by 24" [609.6 mm] wide.

Horizontal doors 36" [914.4 mm] wide by 24" [609.6] tall.

Lengths 12"–28" [305 mm–711 mm]

Travel See chart

Load Up to 25 lbs. [11.4 kg.]

Also Optional detent-out feature (ordered as "DO") available. Designed to accept a variety of European hinges.

Part Number	Length	Travel	A
117-12	12.00 [305]	8.48 [215]	4.75 [120.7]
117-14	14.00 [356]	10.48 [266]	5.25 [133.4]
117-16	16.00 [406]	12.48 [317]	5.25 [133.4]
117-18	18.00 [457]	14.48 [368]	6.25 [158.8]
117-20	20.00 [508]	16.48 [419]	6.25 [158.8]
117-22	22.00 [559]	18.48 [469]	7.25 [184.2]
117-24	24.00 [610]	20.48 [520]	7.25 [184.2]
117-26	26.00 [660]	22.48 [571]	7.25 [184.2]
117-28	28.00 [711]	24.48 [622]	7.25 [184.2]

• RoHS compliant.

Vertical Application/No Partition

Step 1. Spend a minute familiarizing yourself with the various terms in the drawings.

Step 2. Fabricate and rout both ends of a 3/4" [19 mm] follower strip as shown in Figures 1 and 2. Even though a 3/4" follower strip is preferred, it is possible to use one with a minimum thickness of 5/8" [15.9 mm]. Regardless of the size follower strip used, it is necessary to leave 1/2" [12.7 mm] wood below the rout line when using the Salice hinges recommended on page 3.

NOTE: When the use of a 3rd hinge is recommended, another rout located at the midpoint of the follower strip is required. Refer to hinge manufacturer's catalog for number of hinges recommended based on door height.

Step 3. Attach the follower strip to the slides as shown in Figures 1 and 2. It is essential that a 90° angle exist between the follower strip and the slides. After the follower strip is attached, check to make sure the slides are parallel. If the slides are not parallel, they will not operate properly when installed in the cabinet.

NOTE: The follower strip must be attached to the slides prior to the slides being installed in the cabinet.

Step 4. Mount the hinge mounting plates to the follower strip as shown in Figure 2.

Step 5. Mount the slides to the cabinet. See Figures 1 and 3. It is essential that both slide rollers be located the same distance from the front of the cabinet. This will ensure the back of the cabinet door will be in contact with the rollers when the door is in the closed position.

Step 6. Drill the 35 mm holes in the door for hinge cups. See Figure 3. Allow the maximum distance between the hinge cup and the edge of the door. The recommended tab distance is specified in the table shown on the page 3.

Step 7. Install the pivot blocks as shown to prevent premature door rotation. See Figures 3 and 4. The blocks, mounted to the cabinet floor and underside of the top, must contact the back of the door in the open and closed position.

FINAL STEP: Adjust door gap as desired, using adjustment features provided by hinge manufacturer.

CAUTION: CLOSING THE CABINET DOOR BEFORE IT IS FULLY EXTENDED WILL DAMAGE THE DOOR FRONT AND THE SLIDES. The leverage can cause slide separation.

Figure 1 **Front View**

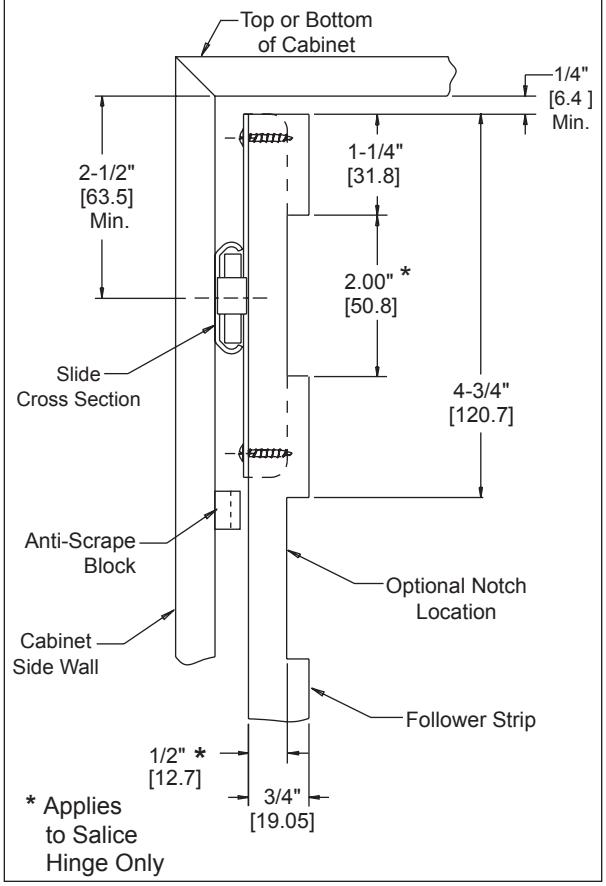

Figure 2 **Side View**

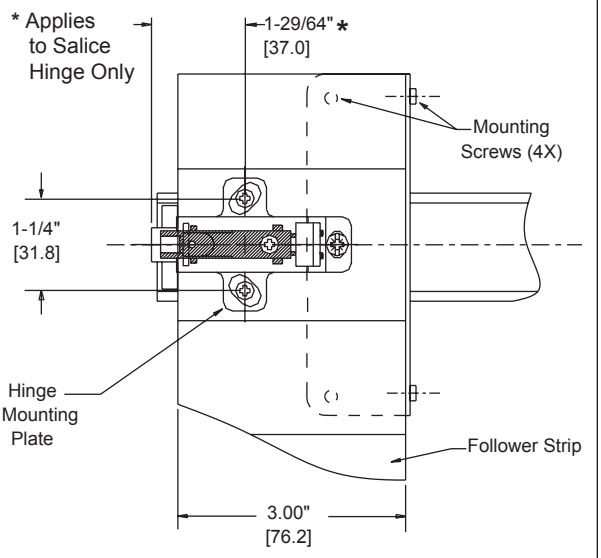

Top View

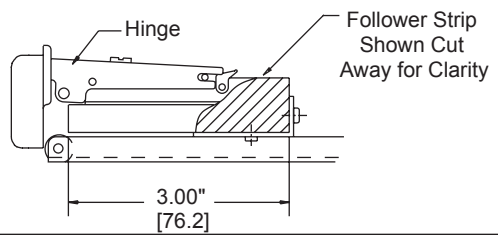

Vertical Application/With Partition

Step 1. Allow for an operating envelope as shown in Figure 3. A "pocket" is required to clear door and protruding hinge arms on a 3/4" [19 mm] thick door. See Dimension A in Figure 3.

Step 2. To install and adjust hinge, the front of the partition should be inset approximately 2-1/2" [63.5 mm] from the back of the closed door.

Step 3. Continue installation by following Steps 1 through 7 as shown on previous page.

Pivot Block

For proper door tracking, the pivot block should just touch the back side of the door in both the closed and open positions. See Figure 4. If a partition is being used, set partition in back of block.

Anti-Scrape Block

To protect the door face and corner, position the anti-scrape block so it is just touching the door back in the closed position. See Figure 5.

Also: For tall, heavy doors, consider using Accuride Flipper Door Model 1332/1432 with Anti-Rak Cable System.

Recommended Hinges (Vertical Doors)			
MANUFACTURER	**HINGE**	**MOUNTING PLATE**	**TAB**
Salice Clip-On	C2P7A99	BAR3R09	5/16" [8]
Blum Clip-On	71T9550	175H7100	5/16" [8]
Mepla Clip-On	146-305-53-0015	314-393-81-0015	1/4" [6]
Grass Snap-On	3606VZ	G3/RZ1.3/5.2/37 **	5/16" [8] *

* Requires 3 mm notch to the door to clear the hinge arm.
** Base plate set back at 50 mm.

Figure 3

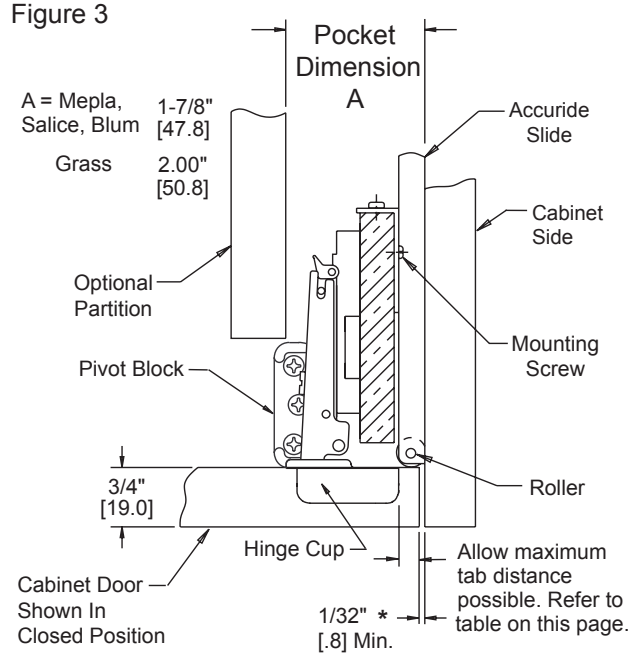

Figure 4

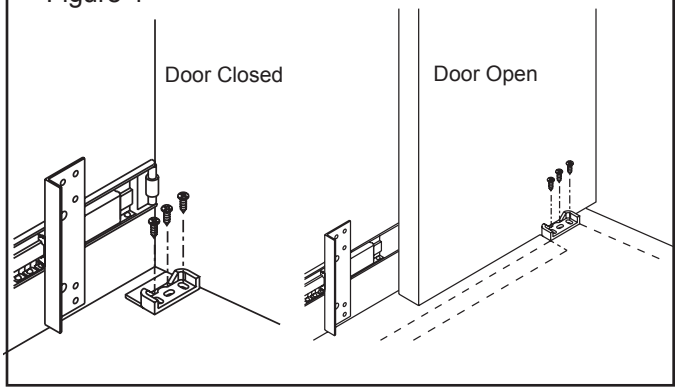

Figure 5

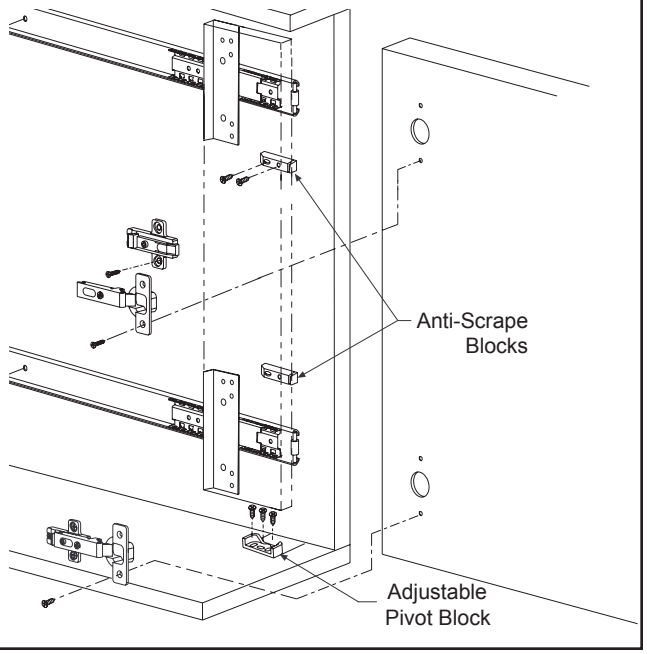

For horizontal applications, follow the mounting instructions on Page 2 for Vertical Applications/Without Partition and rotate the cabinet view 90°. See Figure 6.

Step 1. Fabricate the follower strip and attach to slides as indicated in Steps 2 and 3 and Figures 1 and 2.

Step 2. Mount the hinge mounting plates to the follower strip as shown in Figure 2.

Step 3. Mount the slide to the cabinet ceiling, making sure both slide rollers are located the same distance from the front of the cabinet. This will ensure the back of the cabinet door will be in contact with the rollers when the door is closed.

Step 4. Follow the instructions for drilling the hinge cup holes in Step 6 of Figure 3.

Step 5. Install the pivot blocks to the sides of the cabinet wall as shown in Figure 6. The pivot block should just touch the back side of the door in both the open and closed positions.

Step 6. Position the anti-scrape blocks on cabinet ceiling as shown in Figure 6. The blocks should be placed as close to the slide as possible, without causing interference.

FINAL STEP: Adjust door gap as desired, using adjustment features provided by hinge manufacturer.

Slide Ordering Instructions

Complete your order for Accuride Model 117 Flipper Door slide by specifying the following:

100 Pair C 117 -18 -DO D

- Total Slides Required
- Slide Finish
- Slide Model
- Slide Length
- Optional Detent-Out Feature
- Optional Polybag Packaging

Packaging

Distributor (D) Pack: Polybag contains two slides, one pivot block kit, and mounting screws.

Lengths 12"–28" 5 pair per box

Bulk (P) Pack: Slides only. Pivot block kit ordered separate.

Lengths 12"–22" 15 pair per box
Lengths 24"–28" 5 pair per box

Optional Hardware Kits—Ordered Separately

For optional pivot block kit, order part number 4180-0302-XE. Order one kit per pair of slides. Kit contains:

2 each	Pivot blocks	P/N 2336-2839-YE
2 each	Anti-scrape blocks	P/N 2336-2838-YE
6 each	#8 X 7/16" black screws	P/N 2410-3218-BE
4 each	#8 X 3/4" black screws	P/N 2410-3205-BE
1 each	Installation instructions	

Figure 6

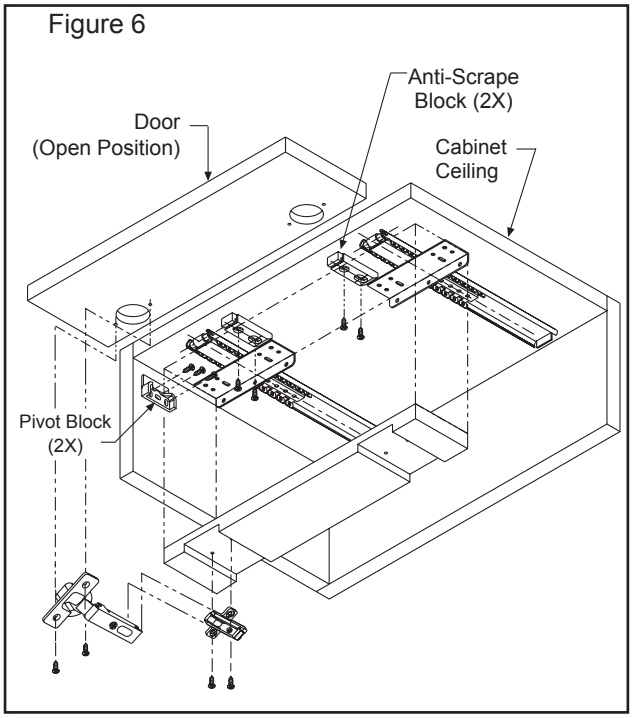

Specifications

Slide members: Cold rolled steel
Ball retainers: Cold rolled steel
Ball bearings: Carburized steel

RoHS compliant.

Note: Specifications, materials, prices, terms, and delivery are subject to change without notice.

ACCURIDE INTERNATIONAL INC.
12311 Shoemaker Avenue
Santa Fe Springs, CA 90670
TEL (562) 903-0200
FAX (562) 903-0208
www.accuride.com
Manufacturing, Engineering, and Sales
United States • Germany • Japan • Mexico • United Kingdom • China

Copyright © 2009 Accuride International Inc. 3700-9296(9297)-MK005-R9-0509