Accuride®

MODEL 1155
Wood Applications

APPLICATIONS: Wood binder storage cabinets in open office systems, medical office storage cabinets and other cabinets with doors rotating upward and retracting over the top where a slow closing feature is required.

Easy-Down® Flipper Door Slide®
Optional Mounting Brackets
Up to 30 lb. [14 kg.] Capacity

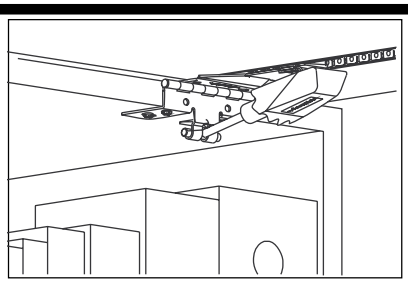

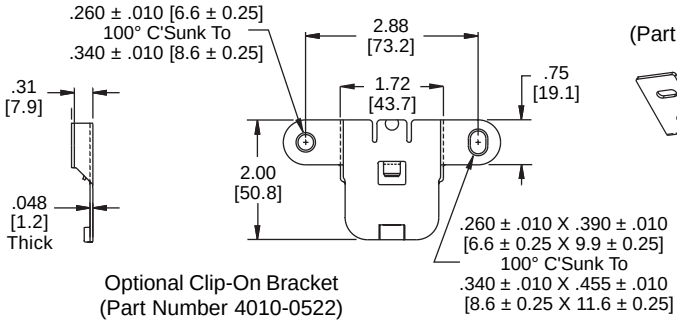

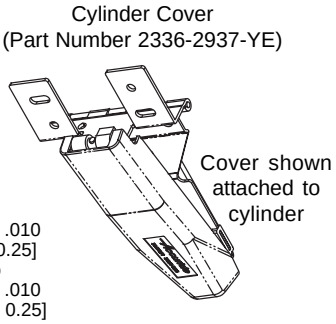

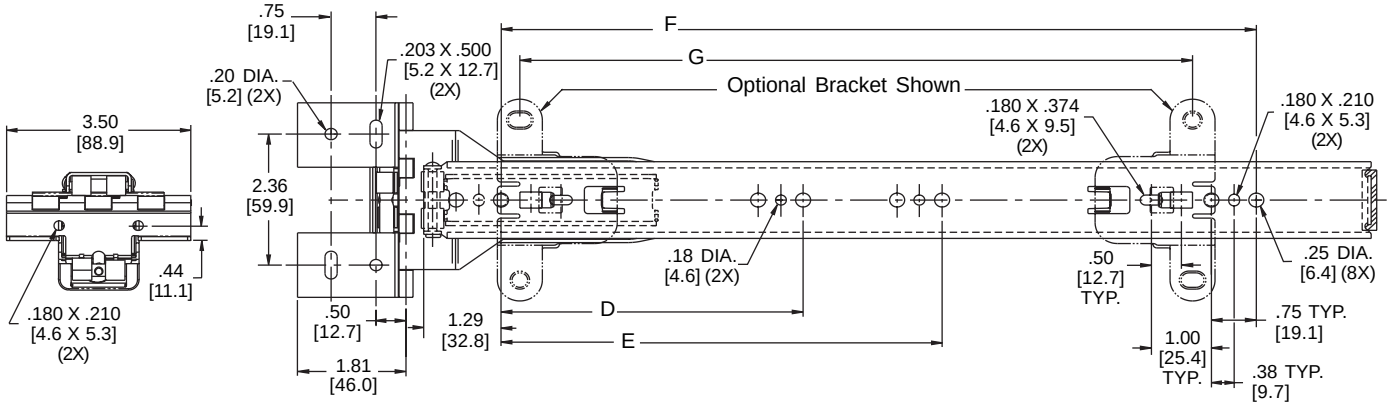

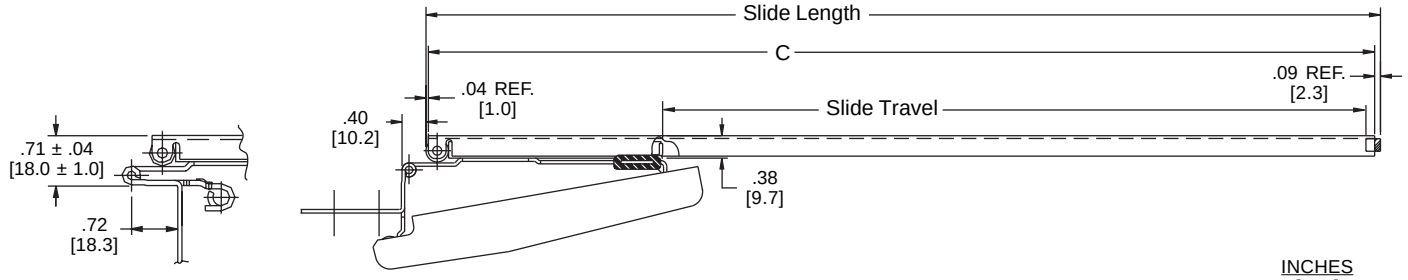

INCHES
[mm]

Finish Bright electro-zinc (C) or black zinc***** (CB) plating

Length 12" to 24" [303mm to 608mm]

Load Up to 30 lbs. [14 kg.] capacity

Travel See Chart

Door Sizes Up to 48" [1219mm] wide doors

Hardware #8 pan head or binding head screws

Features Silenced open and closed

***** Minimum order quantities may apply.

Part Number	Slide Length	Slide Travel	C	D	E	F	G
1155-12	11.94 [303.3]	7.64 [194.1]	11.81 [300.0]	5.04 [128.0]		8.82 [224.0]	7.45 [189.2]
1155-14	13.94 [354.1]	9.64 [244.9]	13.81 [350.8]	5.04 [128.0]		8.82 [224.0]	7.45 [189.2]
1155-16	15.94 [404.9]	11.64 [295.7]	15.81 [401.6]	5.04 [128.0]		12.60 [320.0]	11.23 [285.2]
1155-18	17.94 [455.7]	13.64 [346.4]	17.81 [452.4]	5.04 [128.0]		13.86 [352.0]	12.49 [317.2]
1155-20	19.94 [506.5]	15.64 [397.3]	19.81 [503.2]	5.04 [128.0]		16.38 [416.0]	15.01 [381.3]
1155-22	21.94 [557.3]	17.64 [448.1]	21.81 [554.0]	5.04 [128.0]	13.86 [352.0]	18.90 [480.0]	17.53 [445.3]
1155-24	23.94 [608.1]	19.64 [498.9]	23.81 [604.8]	5.04 [128.0]	13.86 [352.0]	18.90 [480.0]	17.53 [445.3]

Installation Instructions

CAUTION: During operation, the door may be over-rotated, stressing the slide-to-door mounting screws. When the clip-on brackets **are not used**, mounting screws are quite short and may not hold sufficiently in particle composition doors such as MDF. For an extra margin of safety, apply hot melt glue or similar adhesive to bottom of rout as slides are installed.

For 3/4" Minimum Thick Door

1. Whenever possible, use of the clip-on mounting brackets is recommended. These will allow use of 5/8" [15.9] long screws for full thread purchase in softer door materials. See Figure 1 for routing dimensions.
2. Clip brackets into special slots in slide.
3. Mount slides using screws in slotted holes only. This allows adjustment of door to cabinet opening. After fitting, install screws in round holes on brackets to secure in position.
4. Rout case top to achieve desired gap. Move hinge assembly to bottom of door and align hinges to predrilled holes. See Figure 2.
5. Install fixing screws "C". See Figure 3.
6. When clip-on brackets cannot be used, rout door for slides as shown in Figure 2. Rout to a depth of 11/32" [8.7] will minimize gap between back of door and case.
7. Attach slides to door using short screws (7/16" [11.1] maximum length). Check cabinet alignment, adjust slide locations as required. and mark slide locations. Remove slides and reinstall using hot melt or similar high strength adhesive. Install screws (minimum of 4) using polymer glue, ensuring screw heads do not obstruct ball retainer and roller moves freely.

Slide Ordering Instructions

Complete your order for Accuride model 1155 by specifying the following:

10 Pair CB 1155 -16 D

- Total Required Slides
- Slide Finish
- Slide Model
- Slide Length
- Optional Polybag Packaging

Packaging

Distributor (D) Pack: Available in black zinc (CB) finish only. All lengths are packaged 2 pair per box. Each polybag contains 2 slides, 2 cyclinder covers, 4 clip-on brackets, slide and bracket mounting screws, and installation instructions.

Bulk (P) Pack: All lengths are packaged 10 pair per box. Cylinder covers included but not attached. Optional clip-on brackets and mounting screws are ordered separate.

Optional Hardware Kits - Ordered Separately

Clip-on brackets can be ordered in bulk or as a kit. Brackets are available in clear zinc (C) or black zinc (CB) finish.

For bulk, order 4 brackets per pair of slides. Specify bracket part number 4010-0522 then -CE (zinc) or -BE (black) for finish.

For bracket kit, order part number 4180-0325-XE for zinc (C) or 4180-0326-XE for black (CB) finish. Each kit contains 4 clip-on brackets and 8 mounting screws. Order 1 kit per pair of slides.

Specifications

Slide members and ball retainers: Cold rolled steel
Ball bearings: Carburized steel

NOTE: Specifications, materials, prices, terms, and delivery are subject to change without notice.

Figure 1

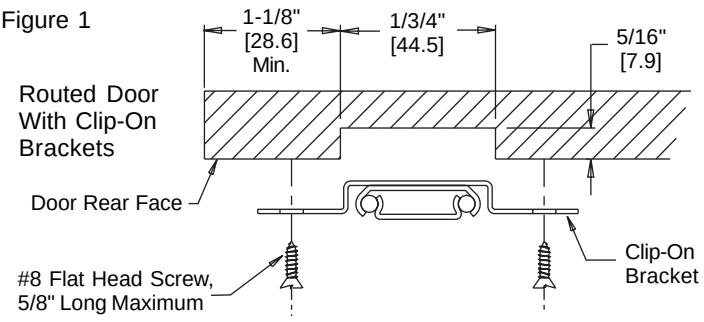

Figure 2

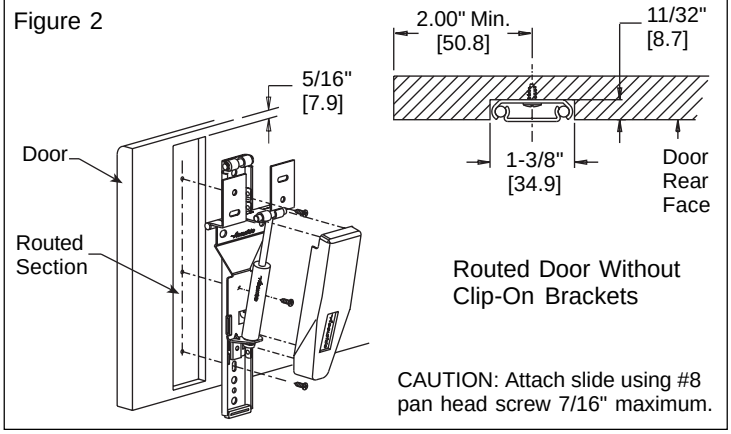

Figure 3

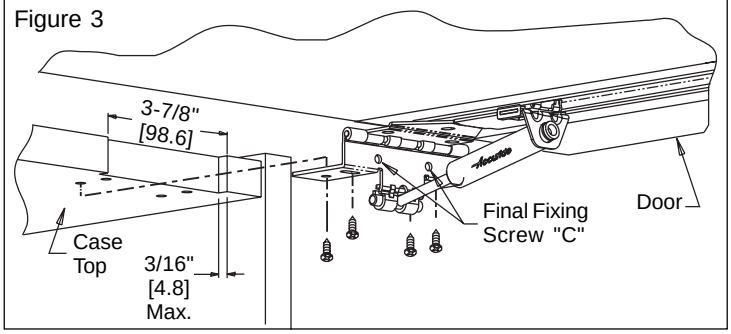

Figure 4

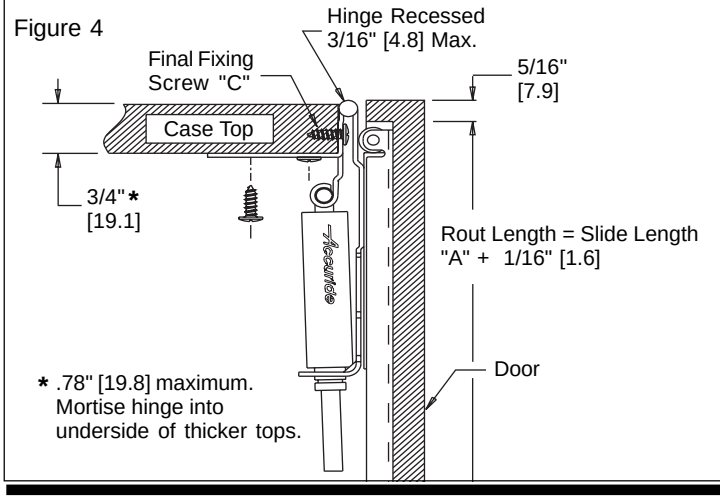

Accuride

ACCURIDE INTERNATIONAL INC.
12311 Shoemaker Avenue
Santa Fe Springs, CA 90670
TEL (562) 903-0200
FAX (562) 903-0208
www.accuride.com
Manufacturing, Engineering, and Sales
United States • Germany • Japan • Mexico • United Kingdom • China

Copyright © 2018 Accuride International Inc. Printed in U.S.A. 3700-9400(9401)-MK060-R4-0518