19" case, 3 U, 4 U



02202001

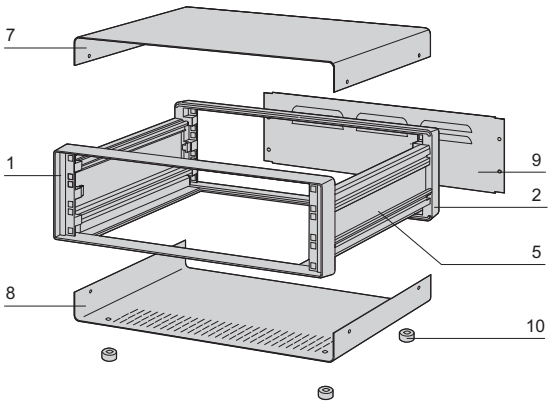

CTTP0001

Front view

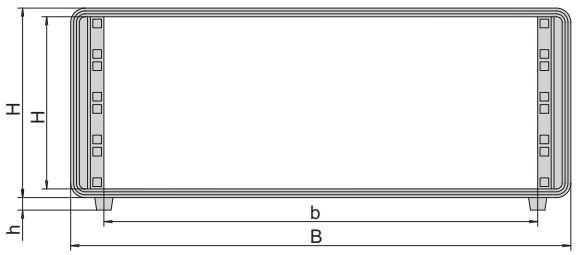

CTA30677

h = case foot height, HE = U, internal usable height

Side view

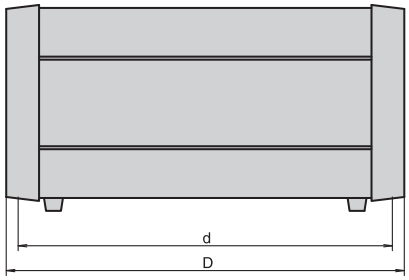

CTA42313

Usable width b = B - 69 mm, h = height of case foot

- Desk-top case (pre-fitted)
- Top cover, base plate and rear panel in steel
- Front and rear frames in die-cast Al
- Ventilation slits in base plate
- Ventilation gills in rear panel
- Side panel with integral handle function

Delivery comprises (kit)

Item	Qty	Description
1	1	Front frame, Al die-cast, RAL 7016, with 19" grid
2	1	Rear frame, Al die-cast, RAL 7016, with 19" grid
5	2	Side panel, Al extrusion, RAL 7016
7	1	Cover plate, Al, 1 mm, RAL 9006, with GND/earthing tag
8	1	Base plate, Al, 1 mm, RAL 9006, with GND/earthing tag
9	1	Rear panel, St, 1 mm, RAL 9006, with GND/earthing tag
10	4	Case foot with anti-slip protection, PC, black, UL 94 V-0
11	1	Assembly kit

Items 1, 2, 5 and 9 fitted.

Order Information

Height H		h	Depth D	Usable depth d	Width B	Part no.
U	mm	mm	mm	mm	mm	
3	153	13.0	300	276	520	10225-601
3	153	13.0	400	376	520	10225-612
3	153	13.0	500	476	520	10225-623
4	198	13.0	300	276	520	10225-602
4	198	13.0	400	376	520	10225-613
4	198	13.0	500	476	520	10225-624

Note

- Please order GND/earthing kit separately, see page 5.106
- The case foot, item 10, can be replaced by a tip-up foot, see page. 5.107
- Please order slide rails separately, see page 5.105

For further information www.schroff.biz/oneclick
oneClick search code = Part no.

ServicePLUS see page 5.4