

TG Series

Featuring an attractive, high-gloss finish, the TG enclosure series is manufactured from high-quality plastics, with a choice of ABS or Polycarbonate for unsurpassed industrial quality. These high quality materials are impact and flame resistant as well as being halogen free. Rated to protection class IP 67, they are not only dustproof but also reliably protect installed electrical or electronic equipment against ingress of water during short-term submersion. The TG series therefore satisfies the most demanding applications and provides sure protection in harsh industrial environments even for highly sensitive electronics.

- 16 sizes available
- IP67 (NEMA TYPE 4X)
- ABS or Polycarbonate
- Gray or transparent covers
- Smooth Sidewalls
- Stainless Steel cover screws (choice of standard screws or 1/4 turn quick release screws)
- Integral cover retainers
- Integral mounting studs in base
- Recessed cover for label inlays or membrane keypads
- Flame resistant and halogen free

TG Enclosure Series

Altech by els spelsberg

The TG Advantage

Recess in cover for inlays.



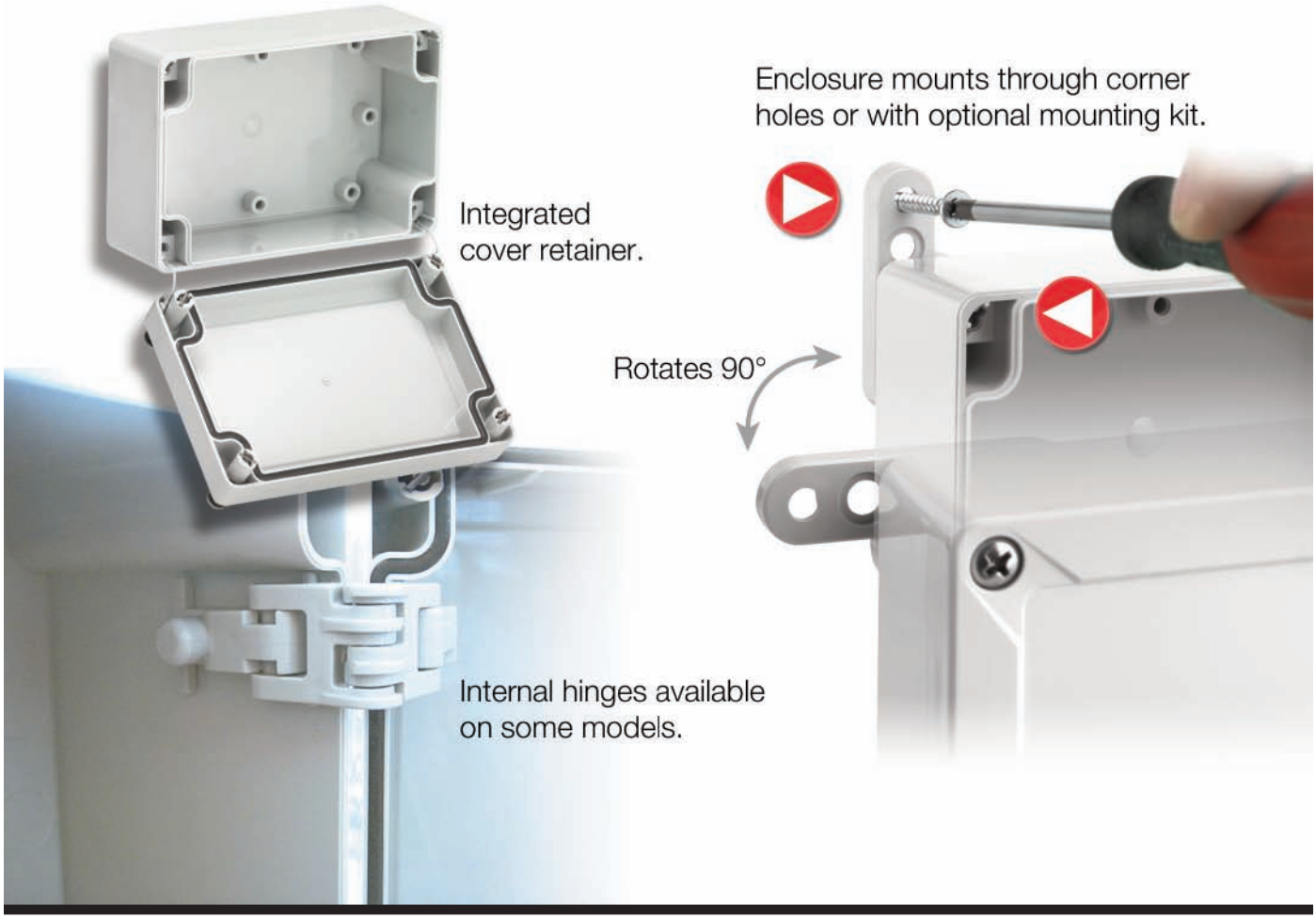

TG88-6 – ABS and Polycarbonate – 84 x 82 x 55 mm (3.31 x 3.23 x 2.17 in.)

Standard Features

- **Protection Level:** IP67 (NEMA 4X)
- **Technical:** Smooth Sidewalls
  Gray or Transparent Cover
  Standard or Quick Turn Screws
  60 x 58 x 0.4 mm Recess in Cover
  Integrated Cover Retainer
- **UL Recognized Enclosure Materials:** ABS or Polycarbonate
- **Transparent Cover Material:** Polycarbonate
- **Gasket Material:** Polyurethane
- **Color:** Light Gray
- **Material Temperature Range:** ABS
  -40˚C to 80˚C (-40˚F to 176˚F)
  Polycarbonate
  -40˚C to 120˚C (-40˚F to 248˚F)
- **Accessories:** See section below



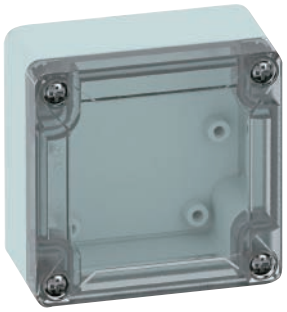

CE UL C US
E208470
Polycarbonate with standard screws Only

TG

Ordering Information	Cat. No. w/ Standard Screws	Cat. No. w/ Quick Turn Screws	Type	Dimensions mm (in) Length	Width	Height	Std. Pk.
ABS							
Gray cover	100-403-91	100-403-01	TGABS88-6-o	84 mm (3.31 in.)	82 mm (3.23 in.)	55 mm (2.17 in.)	1
Transparent cover	101-003-91	101-003-01	TGABS88-6-to	84 mm (3.31 in.)	82 mm (3.23 in.)	55 mm (2.17 in.)	1
Polycarbonate							
Gray cover	200-403-91	200-403-01	TGPC88-6-o	84 mm (3.31 in.)	82 mm (3.23 in.)	55 mm (2.17 in.)	1
Transparent cover	201-003-91	201-003-01	TGPC88-6-to	84 mm (3.31 in.)	82 mm (3.23 in.)	55 mm (2.17 in.)	1

Accessories

Ordering Information	Cat. No.	Type	Std. Pk.
Mounting Plate (plastic)	186-003	TGMPI-88	1
Mounting Plate (steel)	187-003	TGMPS-88	1
DIN Rail – TS35-68	198-068	NS35-68	1
DIN Rail - TS15-68	197-069	TS15-68	1
Mounting Tab Kit	182-002	TGABL	1

Please refer to pages 136-140 additional accessories and detailed information

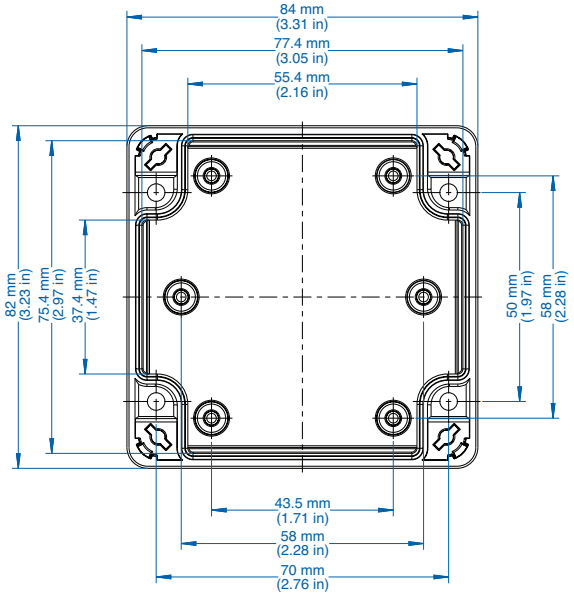

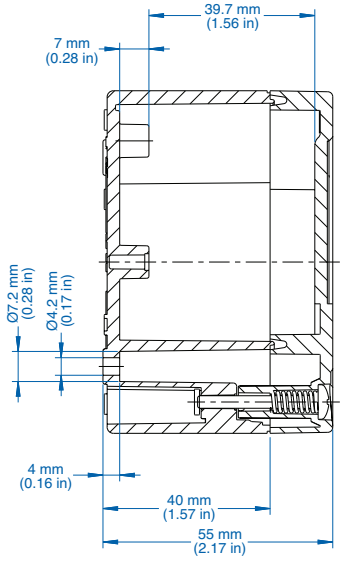

TG88-9 – ABS and Polycarbonate – 84 x 82 x 85 mm (3.31 x 3.23 x 3.35 in.)

Altech by els spelsberg

Standard Features

- **Protection Level:** IP67 (NEMA 4X)
- **Technical:** Smooth Sidewalls
  Gray or Transparent Cover
  Standard or Quick Turn Screws
  60 x 58 x 0.4 mm Recess in Cover
  Integrated Cover Retainer
- **UL Recognized Enclosure Materials:** ABS or Polycarbonate
- **Transparent Cover Material:** Polycarbonate
- **Gasket Material:** Polyurethane
- **Color:** Light Gray
- **Material Temperature Range:** ABS
  -40˚C to 80˚C (-40˚F to 176˚F)
  Polycarbonate
  -40˚C to 120˚C (-40˚F to 248˚F)
- **Accessories:** See section below



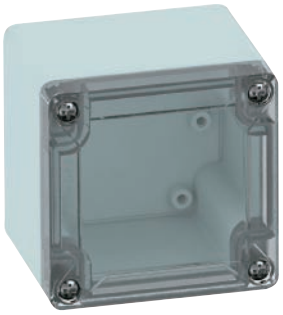

E208470
Polycarbonate with standard screws Only

TG

Ordering Information	Cat. No. w/ Standard Screws	Cat. No. w/ Quick Turn Screws	Type	Dimensions mm (in) Length	Width	Height	Std. Pk.
ABS							
Gray cover	100-903-91	100-903-01	TGABS88-9-o	84 mm (3.31 in.)	82 mm (3.23 in.)	85 mm (3.35 in.)	1
Transparent cover	101-503-91	101-503-01	TGABS88-9-to	84 mm (3.31 in.)	82 mm (3.23 in.)	85 mm (3.35 in.)	1
Polycarbonate							
Gray cover	200-903-91	200-903-01	TGPC88-9-o	84 mm (3.31 in.)	82 mm (3.23 in.)	85 mm (3.35 in.)	1
Transparent cover	201-503-91	201-503-01	TGPC88-9-to	84 mm (3.31 in.)	82 mm (3.23 in.)	85 mm (3.35 in.)	1

Accessories

Ordering Information	Cat. No.	Type	Std. Pk.
Mounting Plate (plastic)	186-003	TGMPI-88	1
Mounting Plate (steel)	187-003	TGMPS-88	1
DIN Rail – TS35-68	198-068	NS35-68	1
DIN Rail - TS15-68	197-069	TS15-68	1
Mounting Tab Kit	182-002	TGABL	1

Please refer to pages 136-140 additional accessories and detailed information

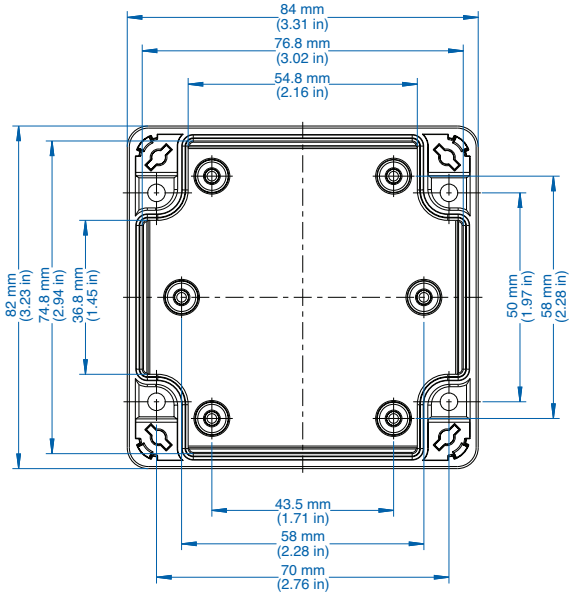

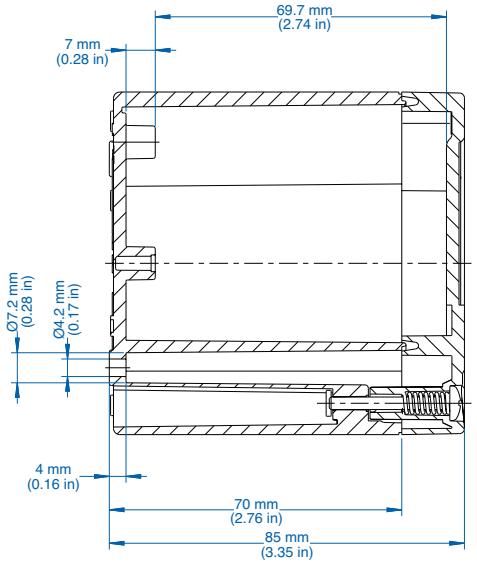

TG1208-6 – ABS and Polycarbonate – 122 x 82 x 55 mm (4.80 x 3.23 x 2.17 in.)

Standard Features

- **Protection Level:** IP67 (NEMA 4X)
- **Technical:** Smooth Sidewalls
  Gray or Transparent Cover
  Standard or Quick Turn Screws
  98 x 58 x 0.4 mm Recess in Cover
  Integrated Cover Retainer
- **UL Recognized Enclosure Materials:** ABS or Polycarbonate
- **Transparent Cover Material:** Polycarbonate
- **Gasket Material:** Polyurethane
- **Color:** Light Gray
- **Material Temperature Range:** ABS
  -40˚C to 80˚C (-40˚F to 176˚F)
  Polycarbonate
  -40˚C to 120˚C (-40˚F to 248˚F)
- **Accessories:** See section below



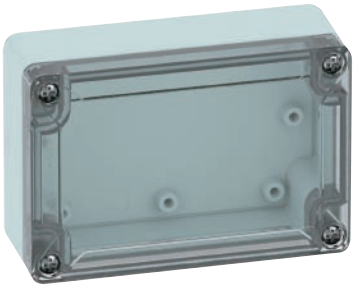

E208470
Polycarbonate with standard screws Only

TG

Ordering Information	Cat. No. w/ Standard Screws	Cat. No. w/ Quick Turn Screws	Type	Dimensions mm (in) Length	Width	Height	Std. Pk.
ABS							
Gray cover	100-404-91	100-404-01	TGABS1208-6-o	122 mm (4.80 in.)	82 mm (3.23 in.)	55 mm (2.17 in.)	1
Transparent cover	101-004-91	101-004-01	TGABS1208-6-to	122 mm (4.80 in.)	82 mm (3.23 in.)	55 mm (2.17 in.)	1
Polycarbonate							
Gray cover	200-404-91	200-404-01	TGPC1208-6-o	122 mm (4.80 in.)	82 mm (3.23 in.)	55 mm (2.17 in.)	1
Transparent cover	201-004-91	201-004-01	TGPC1208-6-to	122 mm (4.80 in.)	82 mm (3.23 in.)	55 mm (2.17 in.)	1

Accessories

Ordering Information	Cat. No.	Type	Std. Pk.
Mounting Plate (plastic)	186-004	TGMPI-1208	1
Mounting Plate (steel)	187-004	TGMPS-1208	1
DIN Rail – TS35-106	198-107	NS35-106/2	1
DIN Rail - TS15-106	197-107	TS15-106/2	1
Mounting Tab Kit	182-002	TGABL	1

Please refer to pages 136-140 additional accessories and detailed information

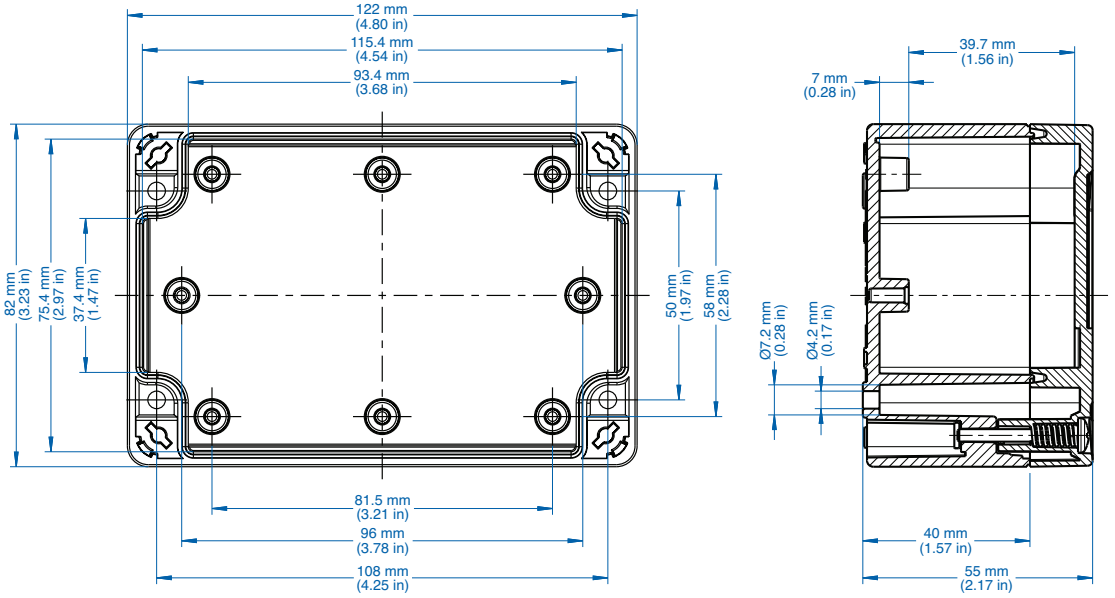

TG1208-9 – ABS and Polycarbonate – 122 x 82 x 85 mm (4.80 x 3.23 x 3.35 in.)

Altech by els spelsberg

Standard Features

- **Protection Level:** IP67 (NEMA 4X)
- **Technical:** Smooth Sidewalls
  Gray or Transparent Cover
  Standard or Quick Turn Screws
  98 x 58 x 0.4 mm Recess in Cover
  Integrated Cover Retainer
- **UL Recognized Enclosure Materials:** ABS or Polycarbonate
- **Transparent Cover Material:** Polycarbonate
- **Gasket Material:** Polyurethane
- **Color:** Light Gray
- **Material Temperature Range:** ABS
  -40˚C to 80˚C (-40˚F to 176˚F)
  Polycarbonate
  -40˚C to 120˚C (-40˚F to 248˚F)
- **Accessories:** See section below





E208470
Polycarbonate with standard screws Only

TG

Ordering Information	Cat. No. w/ Standard Screws	Cat. No. w/ Quick Turn Screws	Type	Dimensions mm (in) Length	Width	Height	Std. Pk.
ABS							
Gray cover	100-904-91	100-904-01	TGABS1208-9-o	122 mm (4.80 in.)	82 mm (3.23 in.)	85 mm (3.35 in.)	1
Transparent cover	101-504-91	101-504-01	TGABS1208-9-to	122 mm (4.80 in.)	82 mm (3.23 in.)	85 mm (3.35 in.)	1
Polycarbonate							
Gray cover	200-904-91	200-904-01	TGPC1208-9-o	122 mm (4.80 in.)	82 mm (3.23 in.)	85 mm (3.35 in.)	1
Transparent cover	201-504-91	201-504-01	TGPC1208-9-to	122 mm (4.80 in.)	82 mm (3.23 in.)	85 mm (3.35 in.)	1

Accessories

Ordering Information	Cat. No.	Type	Std. Pk.
Mounting Plate (plastic)	186-004	TGMPI-1208	1
Mounting Plate (steel)	187-004	TGMPS-1208	1
DIN Rail – TS35-106	198-107	NS35-106/2	1
DIN Rail - TS15-106	197-107	TS15-106/2	1
Mounting Tab Kit	182-002	TGABL	1

Please refer to pages 136-140 additional accessories and detailed information

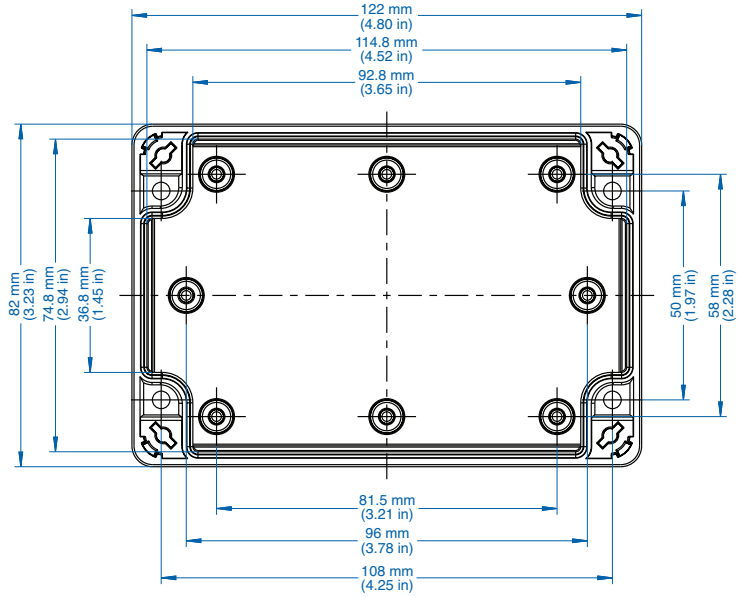

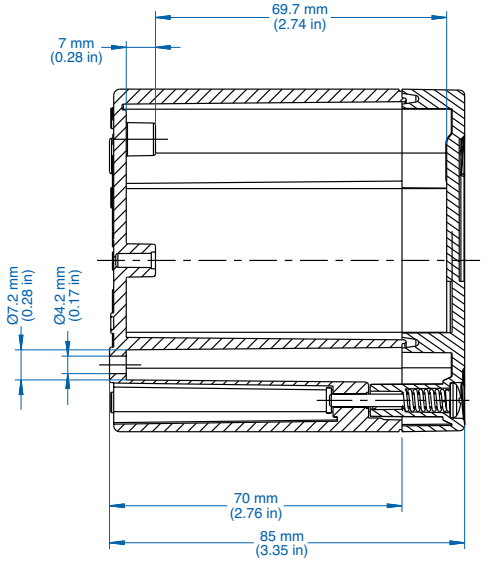

TG1212-6 – ABS and Polycarbonate – 124 x 122 x 55 mm (4.88 x 4.80 x 2.17 in.)

Standard Features

- **Protection Level:** IP67 (NEMA 4X)
- **Technical:** Smooth Sidewalls
  Gray or Transparent Cover
  Standard or Quick Turn Screws
  97 x 95 x 0.4 mm Recess in Cover
  Integrated Cover Retainer
- **UL Recognized Enclosure Materials:** ABS or Polycarbonate
- **Transparent Cover Material:** Polycarbonate
- **Gasket Material:** Polyurethane
- **Color:** Light Gray
- **Material Temperature Range:** ABS
  -40˚C to 80˚C (-40˚F to 176˚F)
  Polycarbonate
  -40˚C to 120˚C (-40˚F to 248˚F)
- **Accessories:** See section below



E208470
Polycarbonate with standard screws Only

TG

Ordering Information	Cat. No. w/ Standard Screws	Cat. No. w/ Quick Turn Screws	Type	Dimensions mm (in) Length	Width	Height	Std. Pk.
ABS							
Gray cover	100-405-91	100-405-01	TGABS1212-6-o	124 mm (4.88 in.)	122 mm (4.80 in.)	55 mm (2.17 in.)	1
Transparent cover	101-005-91	101-005-01	TGABS1212-6-to	124 mm (4.88 in.)	122 mm (4.80 in.)	55 mm (2.17 in.)	1
Polycarbonate							
Gray cover	200-405-91	200-405-01	TGPC1212-6-o	124 mm (4.88 in.)	122 mm (4.80 in.)	55 mm (2.17 in.)	1
Transparent cover	201-005-91	201-005-01	TGPC1212-6-to	124 mm (4.88 in.)	122 mm (4.80 in.)	55 mm (2.17 in.)	1

Accessories

Ordering Information	Cat. No.	Type	Std. Pk.
Mounting Plate (plastic)	186-005	TGMPI-1212	1
Mounting Plate (steel)	187-005	TGMPS-1212	1
DIN Rail – TS35-110	198-110	NS35-110	1
DIN Rail - TS15-110	197-110	TS15-110	1
Internal Hinge Kit Set (longside)	182-001	TGISS	1
Mounting Tab Kit	182-002	TGABL	1

Please refer to pages 136-140 additional accessories and detailed information

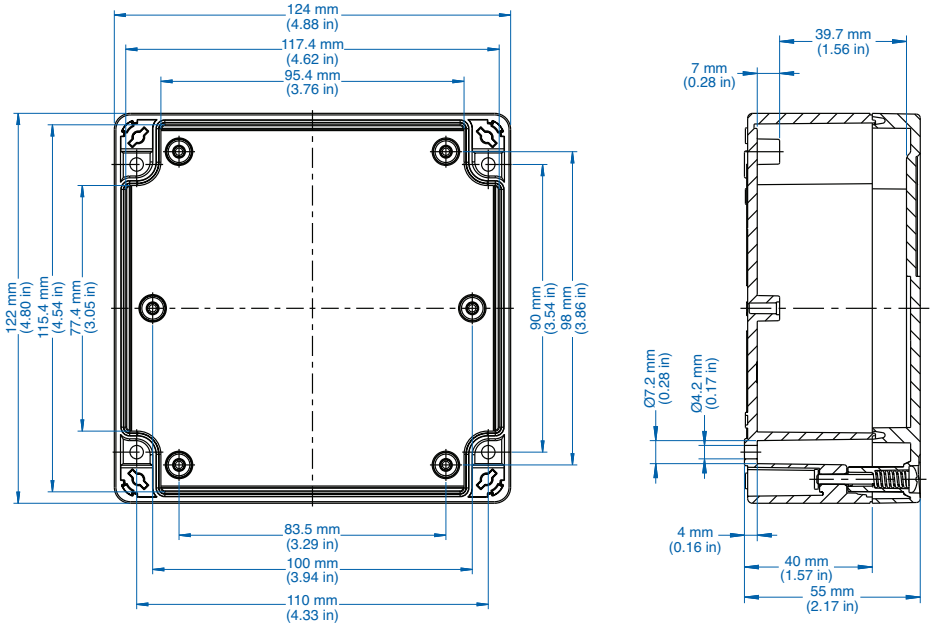

TG1212-9 – ABS and Polycarbonate – 124 x 122 x 85 mm (4.88 x 4.80 x 3.35in.)

Standard Features

- **Protection Level:** IP67 (NEMA 4X)
- **Technical:** Smooth Sidewalls
  Gray or Transparent Cover
  Standard or Quick Turn Screws
  97 x 95 x 0.4 mm Recess in Cover
  Integrated Cover Retainer
- **UL Recognized Enclosure Materials:** ABS or Polycarbonate
- **Transparent Cover Material:** Polycarbonate
- **Gasket Material:** Polyurethane
- **Color:** Light Gray
- **Material Temperature Range:** ABS
  -40˚C to 80˚C (-40˚F to 176˚F)
  Polycarbonate
  -40˚C to 120˚C (-40˚F to 248˚F)
- **Accessories:** See section below



E208470
Polycarbonate with standard screws Only

TG

Ordering Information	Cat. No. w/ Standard Screws	Cat. No. w/ Quick Turn Screws	Type	Dimensions mm (in) Length	Width	Height	Std. Pk.
ABS							
Gray cover	100-905-91	100-905-01	TGABS1212-9-o	124 mm (4.88 in.)	122 mm (4.80 in.)	85 mm (3.35 in.)	1
Transparent cover	101-505-91	101-505-01	TGABS1212-9-to	124 mm (4.88 in.)	122 mm (4.80 in.)	85 mm (3.35 in.)	1
Polycarbonate							
Gray cover	200-905-91	200-905-01	TGPC1212-9-o	124 mm (4.88 in.)	122 mm (4.80 in.)	85 mm (3.35 in.)	1
Transparent cover	201-505-91	201-505-01	TGPC1212-9-to	124 mm (4.88 in.)	122 mm (4.80 in.)	85 mm (3.35 in.)	1

Accessories

Ordering Information	Cat. No.	Type	Std. Pk.
Mounting Plate (plastic)	186-005	TGMPI-1212	1
Mounting Plate (steel)	187-005	TGMPS-1212	1
DIN Rail – TS35-110	198-110	NS35-110	1
DIN Rail - TS15-110	197-110	TS15-110	1
Internal Hinge Kit Set (longside)	182-001	TGISS	1
Mounting Tab Kit	182-002	TGABL	1

Please refer to pages 136-140 additional accessories and detailed information

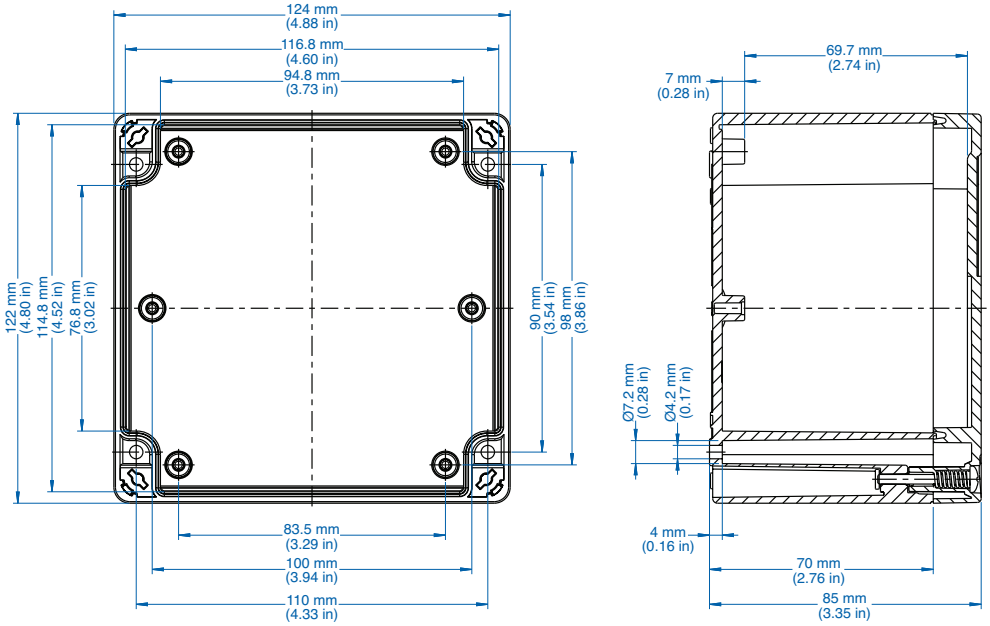

TG1608-6 – ABS and Polycarbonate – 162 x 82 x 55 mm (6.38 x 3.23 x 2.17 in.)

Standard Features

- **Protection Level:** IP67 (NEMA 4X)
- **Technical:** Smooth Sidewalls
  Gray or Transparent Cover
  Standard or Quick Turn Screws
  138 x 58 x 0.4 mm Recess in Cover
  Integrated Cover Retainer
- **UL Recognized Enclosure Materials:** ABS or Polycarbonate
- **Transparent Cover Material:** Polycarbonate
- **Gasket Material:** Polyurethane
- **Color:** Light Gray
- **Material Temperature Range:** ABS
  -40˚C to 80˚C (-40˚F to 176˚F)
  Polycarbonate
  -40˚C to 120˚C (-40˚F to 248˚F)
- **Accessories:** See section below



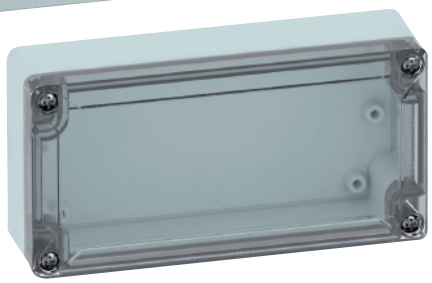

E208470
Polycarbonate with standard screws Only

TG

Ordering Information	Cat. No. w/ Standard Screws	Cat. No. w/ Quick Turn Screws	Type	Dimensions mm (in) Length	Width	Height	Std. Pk.
ABS							
Gray cover	100-406-91	100-406-01	TGABS1608-6-o	162 mm (6.38 in.)	82 mm (3.23 in.)	55 mm (2.17 in.)	1
Transparent cover	101-006-91	101-006-01	TGABS1608-6-to	162 mm (6.38 in.)	82 mm (3.23 in.)	55 mm (2.17 in.)	1
Polycarbonate							
Gray cover	200-406-91	200-406-01	TGPC1608-6-o	162 mm (6.38 in.)	82 mm (3.23 in.)	55 mm (2.17 in.)	1
Transparent cover	201-006-91	201-006-01	TGPC1608-6-to	162 mm (6.38 in.)	82 mm (3.23 in.)	55 mm (2.17 in.)	1

Accessories

Ordering Information	Cat. No.	Type	Std. Pk.
Mounting Plate (plastic)	186-006	TGMPI-1608	1
Mounting Plate (steel)	187-006	TGMPS-1608	1
DIN Rail – TS35-146	198-146	NS35-146	1
DIN Rail - TS15-146	197-146	TS15-146	1
Mounting Tab Kit	182-002	TGABL	1

Please refer to pages 136-140 additional accessories and detailed information

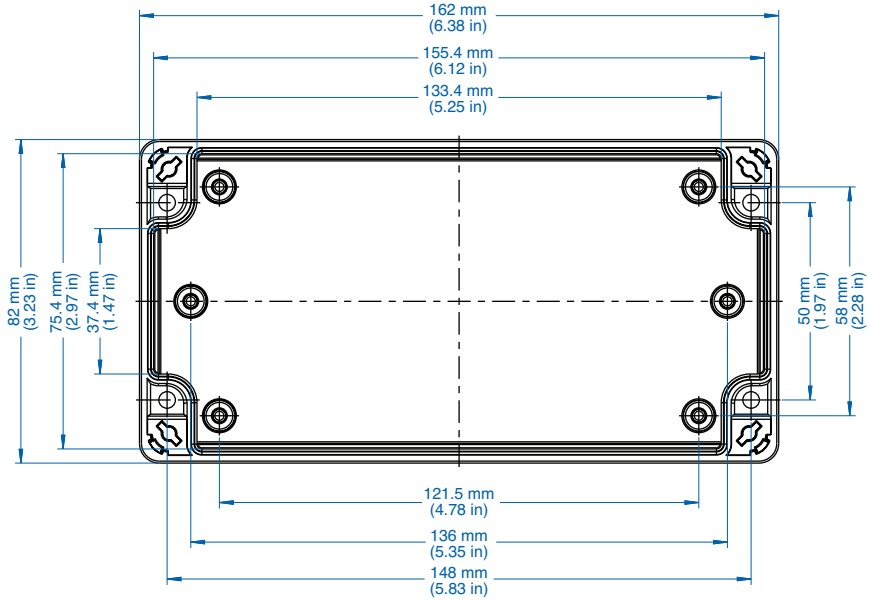

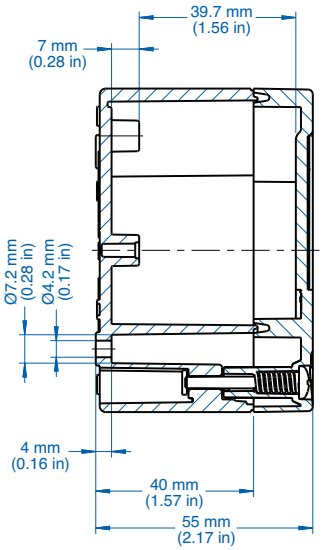

TG1608-9 – ABS and Polycarbonate – 162 x 82 x 85mm (6.38 x 3.23 x 3.35 in.)

Standard Features

- **Protection Level:** IP67 (NEMA 4X)
- **Technical:** Smooth Sidewalls
  Gray or Transparent Cover
  Standard or Quick Turn Screws
  138 x 58 x 0.4 mm Recess in Cover
  Integrated Cover Retainer
- **UL Recognized Enclosure Materials:** ABS or Polycarbonate
- **Transparent Cover Material:** Polycarbonate
- **Gasket Material:** Polyurethane
- **Color:** Light Gray
- **Material Temperature Range:** ABS
  -40˚C to 80˚C (-40˚F to 176˚F)
  Polycarbonate
  -40˚C to 120˚C (-40˚F to 248˚F)
- **Accessories:** See section below



E208470
Polycarbonate with standard screws Only

TG

Ordering Information	Cat. No. w/ Standard Screws	Cat. No. w/ Quick Turn Screws	Type	Dimensions mm (in) Length	Width	Height	Std. Pk.
ABS							
Gray cover	100-906-91	100-906-01	TGABS1608-9-o	162 mm (6.38 in.)	82 mm (3.23 in.)	85 mm (3.35 in.)	1
Transparent cover	101-506-91	101-506-01	TGABS1608-9-to	162 mm (6.38 in.)	82 mm (3.23 in.)	85 mm (3.35 in.)	1
Polycarbonate							
Gray cover	200-906-91	200-906-01	TGPC1608-9-o	162 mm (6.38 in.)	82 mm (3.23 in.)	85 mm (3.35 in.)	1
Transparent cover	201-506-91	201-506-01	TGPC1608-9-to	162 mm (6.38 in.)	82 mm (3.23 in.)	85 mm (3.35 in.)	1

Accessories

Ordering Information	Cat. No.	Type	Std. Pk.
Mounting Plate (plastic)	186-006	TGMPI-1608	1
Mounting Plate (steel)	187-006	TGMPS-1608	1
DIN Rail – TS35-146	198-146	NS35-146	1
DIN Rail - TS15-146	197-146	TS15-146	1
Mounting Tab Kit	182-002	TGABL	1

Please refer to pages 136-140 additional accessories and detailed information

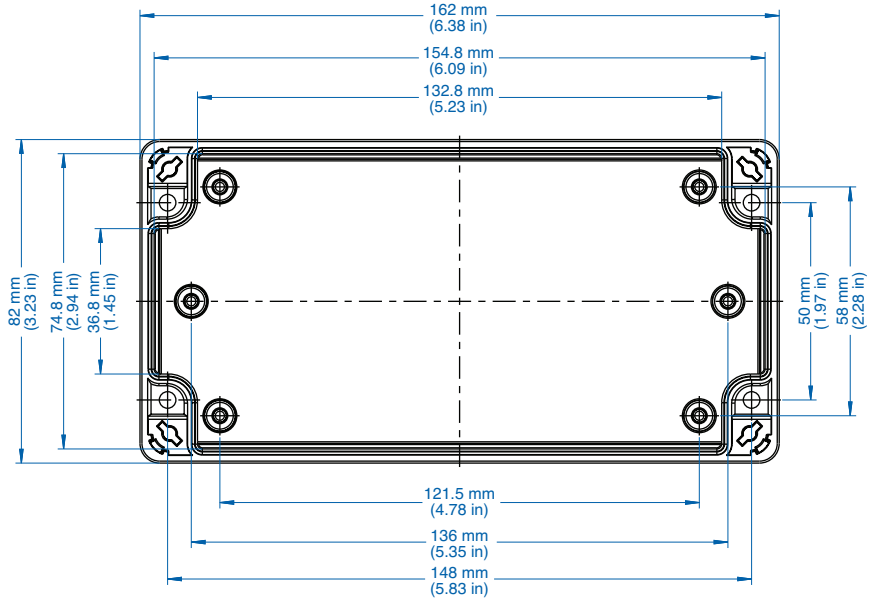

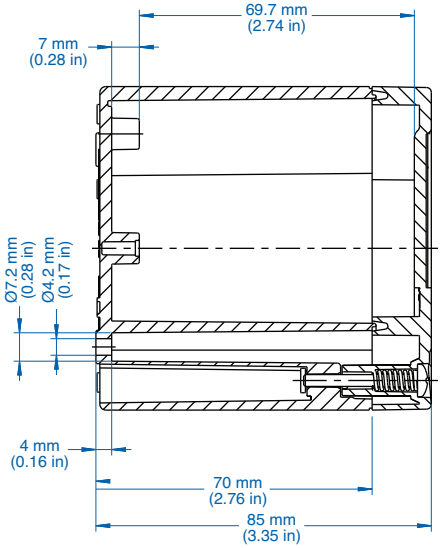

TG1612-9 – ABS and Polycarbonate – 162 x 122 x 90 mm (6.38 x 4.80 x 3.54 in.)

Standard Features

- **Protection Level:** IP67 (NEMA 4X)
- **Technical:** Smooth Sidewalls
  Gray or Transparent Cover
  Standard or Quick Turn Screws
  135 x 95 x 0.4 mm Recess in Cover
  Integrated Cover Retainer
- **UL Recognized Enclosure Materials:** ABS or Polycarbonate
- **Transparent Cover Material:** Polycarbonate
- **Gasket Material:** Polyurethane
- **Color:** Light Gray
- **Material Temperature Range:** ABS
  -40˚C to 80˚C (-40˚F to 176˚F)
  Polycarbonate
  -40˚C to 120˚C (-40˚F to 248˚F)
- **Accessories:** See section below

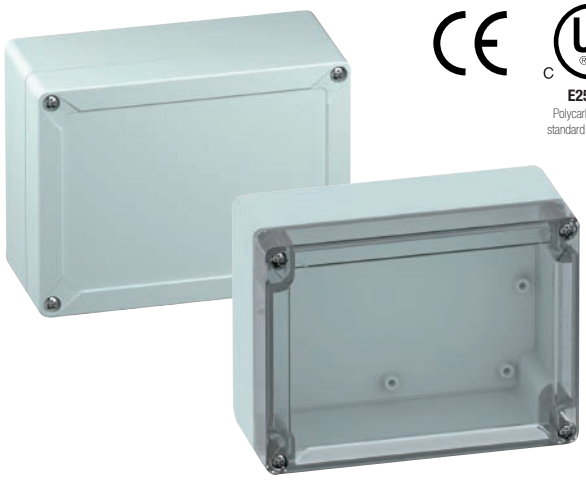

E254144
Polycarbonate with standard screws Only

TG

Ordering Information	Cat. No. w/ Standard Screws	Cat. No. w/ Quick Turn Screws	Type	Dimensions mm (in) Length	Width	Height	Std. Pk.
ABS							
Gray cover	100-407-91	100-407-01	TGABS1612-6-o	162 mm (6.38 in.)	122 mm (4.80 in.)	90 mm (3.54 in.)	1
Transparent cover	101-007-91	101-007-01	TGABS1612-6-to	162 mm (6.38 in.)	122 mm (4.80 in.)	90 mm (3.54 in.)	1
Polycarbonate							
Gray cover	200-407-91	200-407-01	TGPC1612-6-o	162 mm (6.38 in.)	122 mm (4.80 in.)	90 mm (3.54 in.)	1
Transparent cover	201-007-91	201-007-01	TGPC1612-6-to	162 mm (6.38 in.)	122 mm (4.80 in.)	90 mm (3.54 in.)	1

Accessories

Ordering Information	Cat. No.	Type	Std. Pk.
Mounting Plate (plastic)	186-007	TGMPI-1612	1
Mounting Plate (steel)	187-007	TGMPS-1612	1
DIN Rail – TS35-146	198-146	NS35-146	1
DIN Rail - TS15-146	197-146	TS15-146	1
Internal Hinge Kit Set (longside)	182-001	TGISS	1
Mounting Tab Kit	182-002	TGABL	1

Please refer to pages 136-140 additional accessories and detailed information

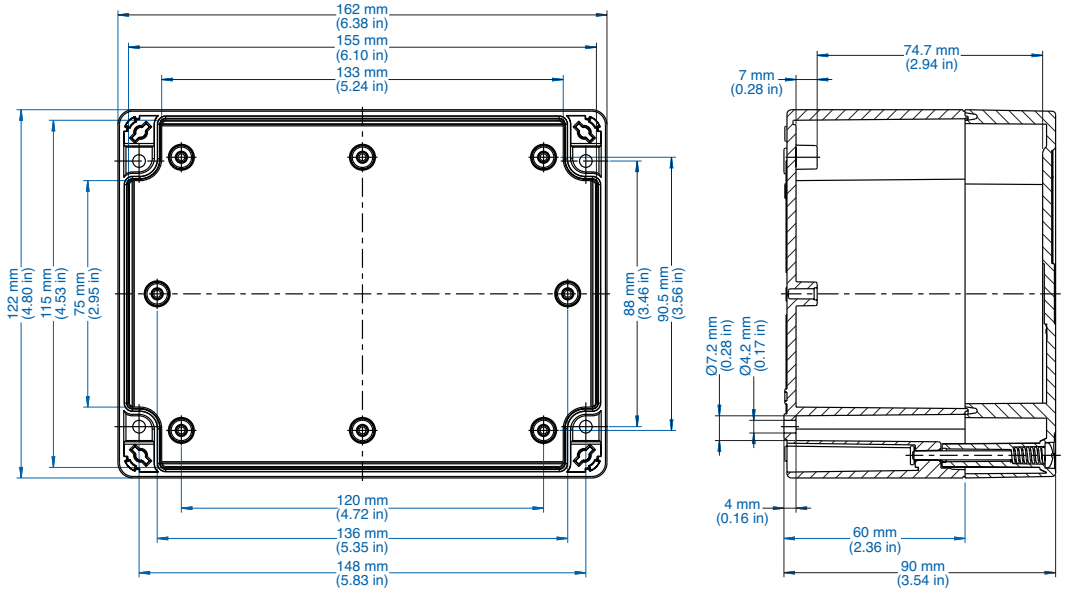

TG2012-8 – ABS and Polycarbonate – 202 x 122 x 75 mm (7.95 x 4.80 x 2.95 in.)

Altech by els spelsberg

Standard Features

- **Protection Level:** IP67 (NEMA 4X)
- **Technical:** Smooth Sidewalls
  Gray or Transparent Cover
  Standard or Quick Turn Screws
  175 x 95 x 0.4 mm Recess in Cover
  Integrated Cover Retainer
- **UL Recognized Enclosure Materials:** ABS or Polycarbonate
- **Transparent Cover Material:** Polycarbonate
- **Gasket Material:** Polyurethane
- **Color:** Light Gray
- **Material Temperature Range:** ABS
  -40˚C to 80˚C (-40˚F to 176˚F)
  Polycarbonate
  -40˚C to 120˚C (-40˚F to 248˚F)
- **Accessories:** See section below

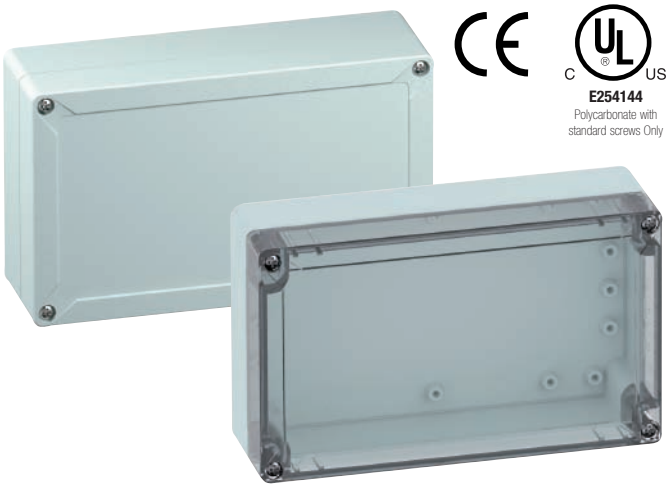

CE cULus E254144
Polycarbonate with standard screws Only

TG

Ordering Information	Cat. No. w/ Standard Screws	Cat. No. w/ Quick Turn Screws	Type	Dimensions mm (in) Length	Width	Height	Std. Pk.
ABS							
Gray cover	100-408-91	100-408-01	TGABS2012-8-o	202 mm (7.95 in.)	122 mm (4.80 in.)	75 mm (2.95 in.)	1
Transparent cover	101-008-91	101-008-01	TGABS2012-8-to	202 mm (7.95 in.)	122 mm (4.80 in.)	75 mm (2.95 in.)	1
Polycarbonate							
Gray cover	200-408-91	200-408-01	TGPC2012-8-o	202 mm (7.95 in.)	122 mm (4.80 in.)	75 mm (2.95 in.)	1
Transparent cover	201-008-91	201-008-01	TGPC2012-8-to	202 mm (7.95 in.)	122 mm (4.80 in.)	75 mm (2.95 in.)	1

Accessories

Ordering Information	Cat. No.	Type	Std. Pk.
Mounting Plate (plastic)	186-008	TGMPI-2012	1
Mounting Plate (steel)	187-008	TGMPS-2012	1
DIN Rail – TS35-186	198-186	NS35-186	1
DIN Rail - TS15-186	197-186	TS15-186	1
Internal Hinge Kit Set (longside)	182-001	TGISS	1
Mounting Tab Kit	182-002	TGABL	1

Please refer to pages 136-140 additional accessories and detailed information

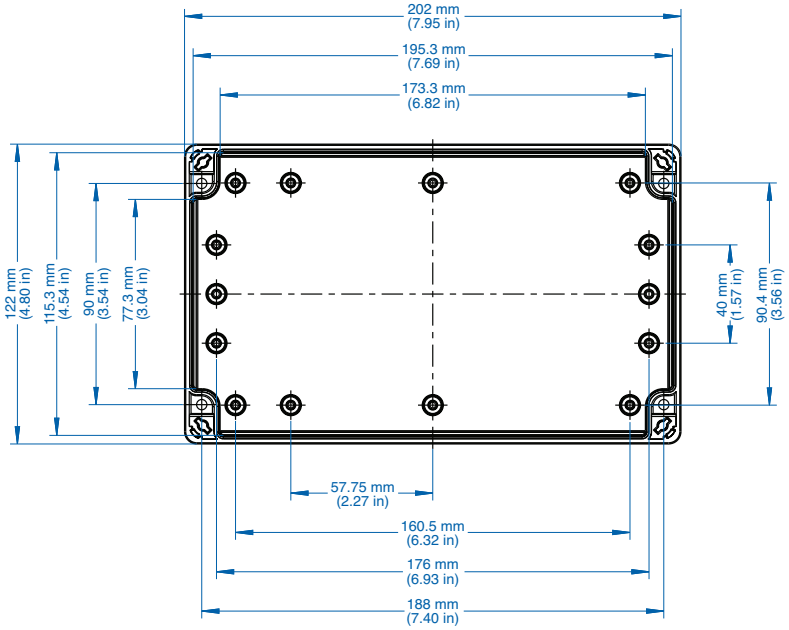

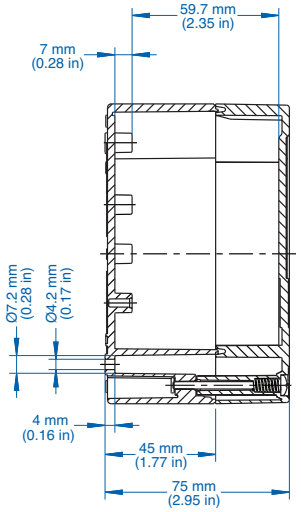

TG2012-9 – ABS and Polycarbonate – 202 x 122 x 90 mm (7.95 x 4.80 x 3.54 in.)

Standard Features

- **Protection Level:** IP67 (NEMA 4X)
- **Technical:** Smooth Sidewalls
  Gray or Transparent Cover
  Standard or Quick Turn Screws
  175 x 95 x 0.4 mm Recess in Cover
  Integrated Cover Retainer
- **UL Recognized Enclosure Materials:** ABS or Polycarbonate
- **Transparent Cover Material:** Polycarbonate
- **Gasket Material:** Polyurethane
- **Color:** Light Gray
- **Material Temperature Range:** ABS
  -40˚C to 80˚C (-40˚F to 176˚F)
  Polycarbonate
  -40˚C to 120˚C (-40˚F to 248˚F)
- **Accessories:** See section below

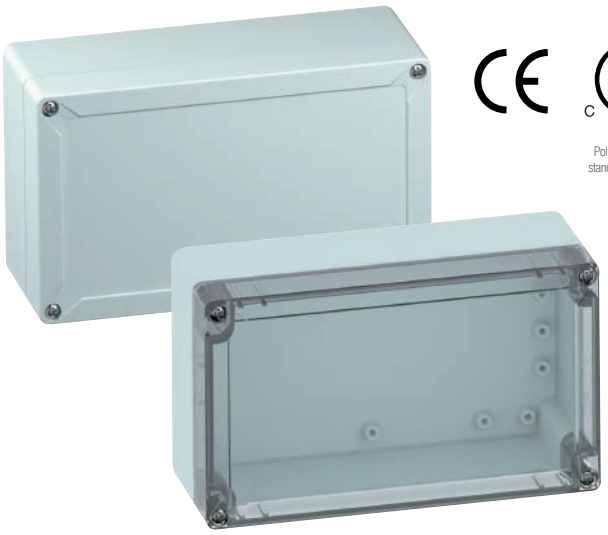

CE UL C US
E254144
Polycarbonate with standard screws Only

TG

Ordering Information	Cat. No. w/ Standard Screws	Cat. No. w/ Quick Turn Screws	Type	Dimensions mm (in) Length	Width	Height	Std. Pk.
ABS							
Gray cover	100-908-91	100-908-01	TGABS2012-9-o	202 mm (7.95 in.)	122 mm (4.80 in.)	90 mm (3.54 in.)	1
Transparent cover	101-508-91	101-508-01	TGABS2012-9-to	202 mm (7.95 in.)	122 mm (4.80 in.)	90 mm (3.54 in.)	1
Polycarbonate							
Gray cover	200-908-91	200-908-01	TGPC2012-9-o	202 mm (7.95 in.)	122 mm (4.80 in.)	90 mm (3.54 in.)	1
Transparent cover	201-508-91	201-508-01	TGPC2012-9-to	202 mm (7.95 in.)	122 mm (4.80 in.)	90 mm (3.54 in.)	1

Accessories

Ordering Information	Cat. No.	Type	Std. Pk.
Mounting Plate (plastic)	186-008	TGMPI-2012	1
Mounting Plate (steel)	187-008	TGMPS-2012	1
DIN Rail – TS35-186	198-186	NS35-186	1
DIN Rail - TS15-186	197-186	TS15-186	1
Internal Hinge Kit Set (longside)	182-001	TGISS	1
Mounting Tab Kit	182-002	TGABL	1

Please refer to pages 136-140 additional accessories and detailed information

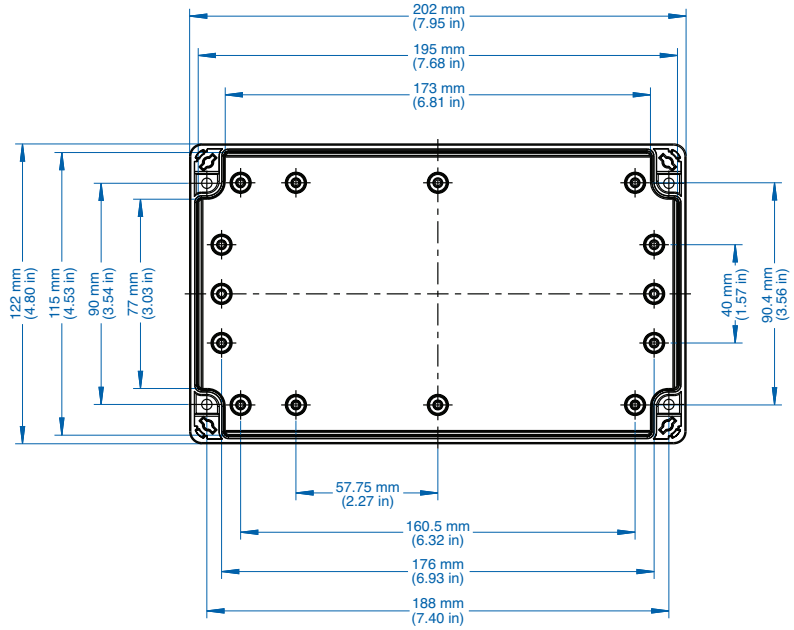

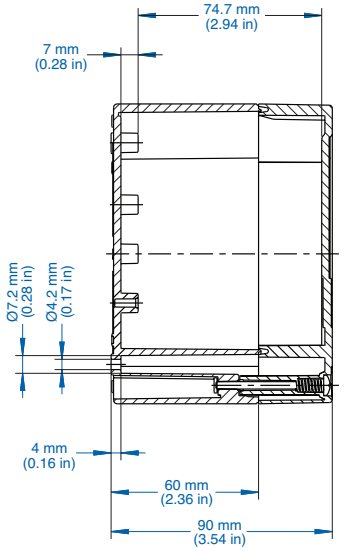

TG2015-9 – ABS and Polycarbonate – 202 x 152 x 90 mm (7.95 x 5.98 x 3.54 in.)

Altech by els spelsberg

Standard Features

- **Protection Level:** IP67 (NEMA 4X)
- **Technical:** Smooth Sidewalls
  Gray or Transparent Cover
  Standard or Quick Turn Screws
  175 x 125 x 0.4 mm Recess in Cover
  Integrated Cover Retainer
- **UL Recognized Enclosure Materials:** ABS or Polycarbonate
- **Transparent Cover Material:** Polycarbonate
- **Gasket Material:** Polyurethane
- **Color:** Light Gray
- **Material Temperature Range:** ABS
  -40˚C to 80˚C (-40˚F to 176˚F)
  Polycarbonate
  -40˚C to 120˚C (-40˚F to 248˚F)
- **Accessories:** See section below



CE cULus E254144
Polycarbonate with standard screws Only

TG

Ordering Information	Cat. No. w/ Standard Screws	Cat. No. w/ Quick Turn Screws	Type	Dimensions mm (in) Length	Width	Height	Std. Pk.
ABS							
Gray cover	100-409-91	100-409-01	TGABS2015-9-o	202 mm (7.95 in.)	152 mm (5.98 in.)	90 mm (3.54 in.)	1
Transparent cover	101-009-91	101-009-01	TGABS2015-9-to	202 mm (7.95 in.)	152 mm (5.98 in.)	90 mm (3.54 in.)	1
Polycarbonate							
Gray cover	200-409-91	200-409-01	TGPC2015-9-o	202 mm (7.95 in.)	152 mm (5.98 in.)	90 mm (3.54 in.)	1
Transparent cover	201-009-91	201-009-01	TGPC2015-9-to	202 mm (7.95 in.)	152 mm (5.98 in.)	90 mm (3.54 in.)	1

Accessories

Ordering Information	Cat. No.	Type	Std. Pk.
Mounting Plate (plastic)	186-009	TGMPI-2015	1
Mounting Plate (steel)	187-009	TGMPS-2015	1
DIN Rail – TS35-170	198-170	NS35-170	1
DIN Rail - TS15-170	197-170	TS15-170	1
Internal Hinge Kit Set	182-001	TGISS	1
Mounting Tab Kit	182-002	TGABL	1

Please refer to pages 136-140 additional accessories and detailed information

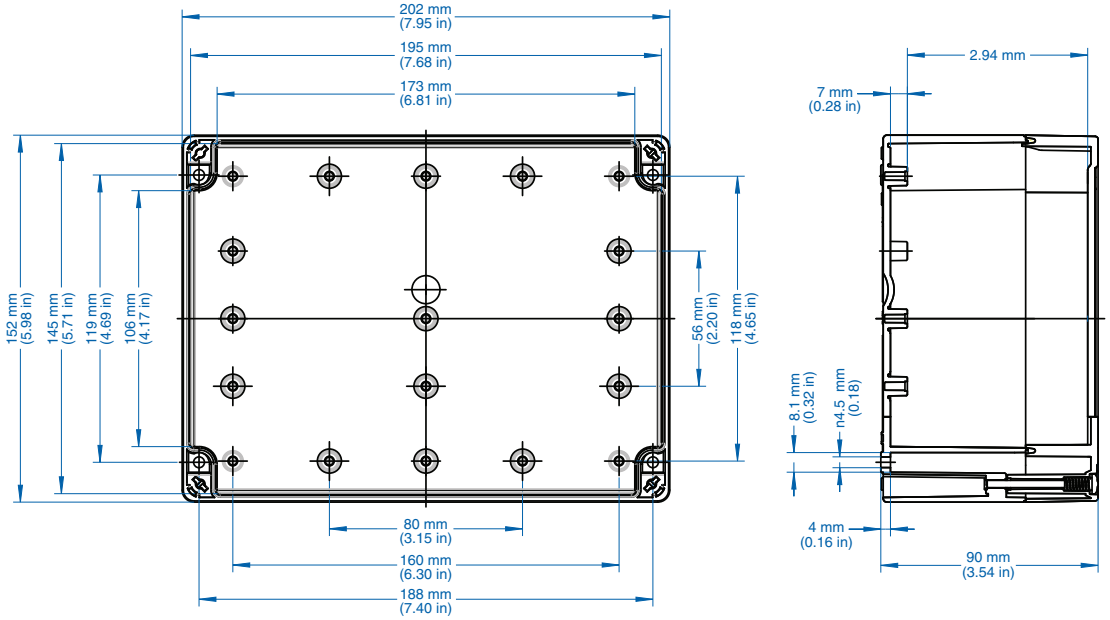

TG2516-9 – ABS and Polycarbonate – 252 x 162 x 90 mm (9.92 x 6.38 x 3.54 in.)

Standard Features

- **Protection Level:** IP67 (NEMA 4X)
- **Technical:** Smooth Sidewalls
  Gray or Transparent Cover
  Standard or Quick Turn Screws
  225 x 135 x 0.4 mm Recess in Cover
  Integrated Cover Retainer
- **UL Recognized Enclosure Materials:** ABS or Polycarbonate
- **Transparent Cover Material:** Polycarbonate
- **Gasket Material:** Polyurethane
- **Color:** Light Gray
- **Material Temperature Range:** ABS
  -40˚C to 80˚C (-40˚F to 176˚F)
  Polycarbonate
  -40˚C to 120˚C (-40˚F to 248˚F)
- **Accessories:** See section below

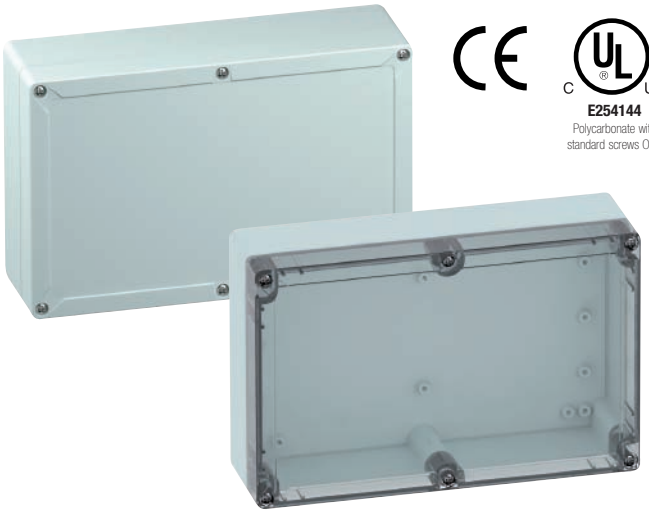

E254144
Polycarbonate with standard screws Only

TG

Ordering Information	Cat. No. w/ Standard Screws	Cat. No. w/ Quick Turn Screws	Type	Dimensions mm (in) Length	Width	Height	Std. Pk.
ABS							
Gray cover	100-412-91	100-412-01	TGABS2516-9-o	252 mm (9.92 in.)	162 mm (6.38 in.)	90 mm (3.54 in.)	1
Transparent cover	101-012-91	101-012-01	TGABS2516-9-to	252 mm (9.92 in.)	162 mm (6.38 in.)	90 mm (3.54 in.)	1
Polycarbonate							
Gray cover	200-412-91	200-412-01	TGPC2516-9-o	252 mm (9.92 in.)	162 mm (6.38 in.)	90 mm (3.54 in.)	1
Transparent cover	201-012-91	201-012-01	TGPC2516-9-to	252 mm (9.92 in.)	162 mm (6.38 in.)	90 mm (3.54 in.)	1

Accessories

Ordering Information	Cat. No.	Type	Std. Pk.
Mounting Plate (plastic)	186-012	TGMPI-2516	1
Mounting Plate (steel)	187-012	TGMPS-2516	1
DIN Rail – TS35-222	198-222	NS35-222	1
DIN Rail - TS15-222	197-222	TS15-222	1
Internal Hinge Kit Set	182-001	TGISS	1
Mounting Tab Kit	182-002	TGABL	1

Please refer to pages 136-140 additional accessories and detailed information

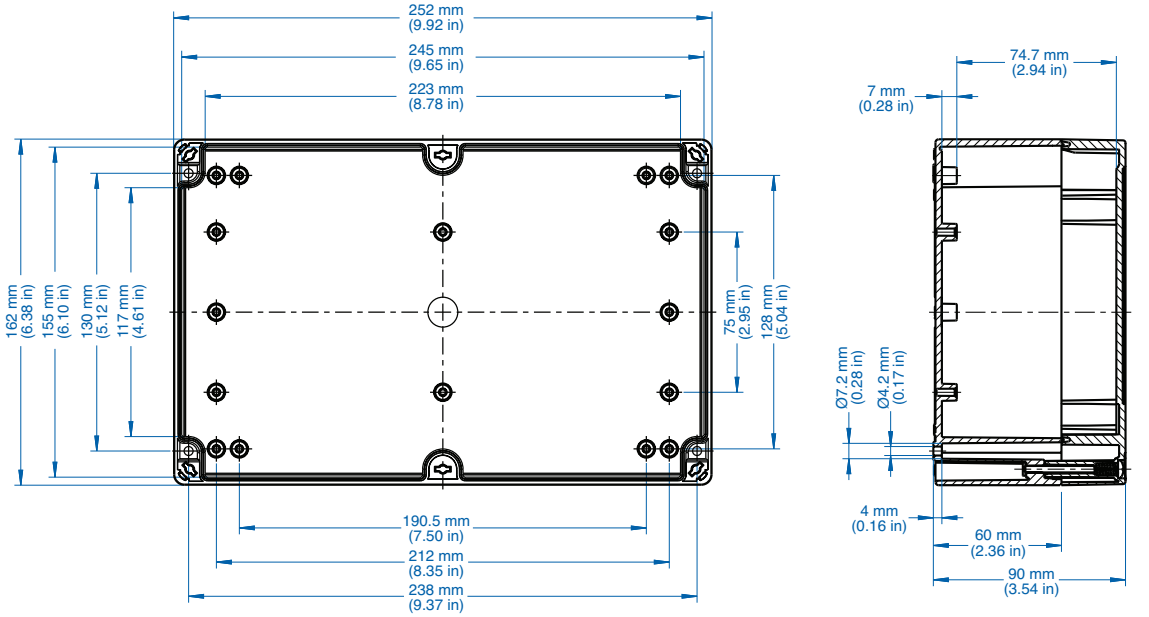

TG2516-12 – ABS and Polycarbonate – 252 x 162 x 120 mm (9.92 x 6.38 x 4.72 in.)

Altech by els spelsberg

Standard Features

- **Protection Level:** IP67 (NEMA 4X)
- **Technical:** Smooth Sidewalls
  Gray or Transparent Cover
  Standard or Quick Turn Screws
  225 x 135 x 0.4 mm Recess in Cover
  Integrated Cover Retainer
- **UL Recognized Enclosure Materials:** ABS or Polycarbonate
- **Transparent Cover Material:** Polycarbonate
- **Gasket Material:** Polyurethane
- **Color:** Light Gray
- **Material Temperature Range:** ABS
  -40˚C to 80˚C (-40˚F to 176˚F)
  Polycarbonate
  -40˚C to 120˚C (-40˚F to 248˚F)
- **Accessories:** See section below



CE cULus E254144
Polycarbonate with standard screws Only

TG

Ordering Information	Cat. No. w/ Standard Screws	Cat. No. w/ Quick Turn Screws	Type	Dimensions mm (in) Length	Width	Height	Std. Pk.
ABS							
Gray cover	100-912-91	100-912-01	TGABS2516-12-o	252 mm (9.92 in.)	162 mm (6.38 in.)	120 mm (4.72 in.)	1
Transparent cover	101-512-91	101-512-01	TGABS2516-12-to	252 mm (9.92 in.)	162 mm (6.38 in.)	120 mm (4.72 in.)	1
Polycarbonate							
Gray cover	200-912-91	200-912-01	TGPC2516-12-o	252 mm (9.92 in.)	162 mm (6.38 in.)	120 mm (4.72 in.)	1
Transparent cover	201-512-91	201-512-01	TGPC2516-12-to	252 mm (9.92 in.)	162 mm (6.38 in.)	120 mm (4.72 in.)	1

Accessories

Ordering Information	Cat. No.	Type	Std. Pk.
Mounting Plate (plastic)	186-012	TGMPI-2516	1
Mounting Plate (steel)	187-012	TGMPS-2516	1
DIN Rail – TS35-222	198-222	NS35-222	1
DIN Rail - TS15-222	197-222	TS15-222	1
Internal Hinge Kit Set	182-001	TGISS	1
Mounting Tab Kit	182-002	TGABL	1

Please refer to pages 136-140 additional accessories and detailed information

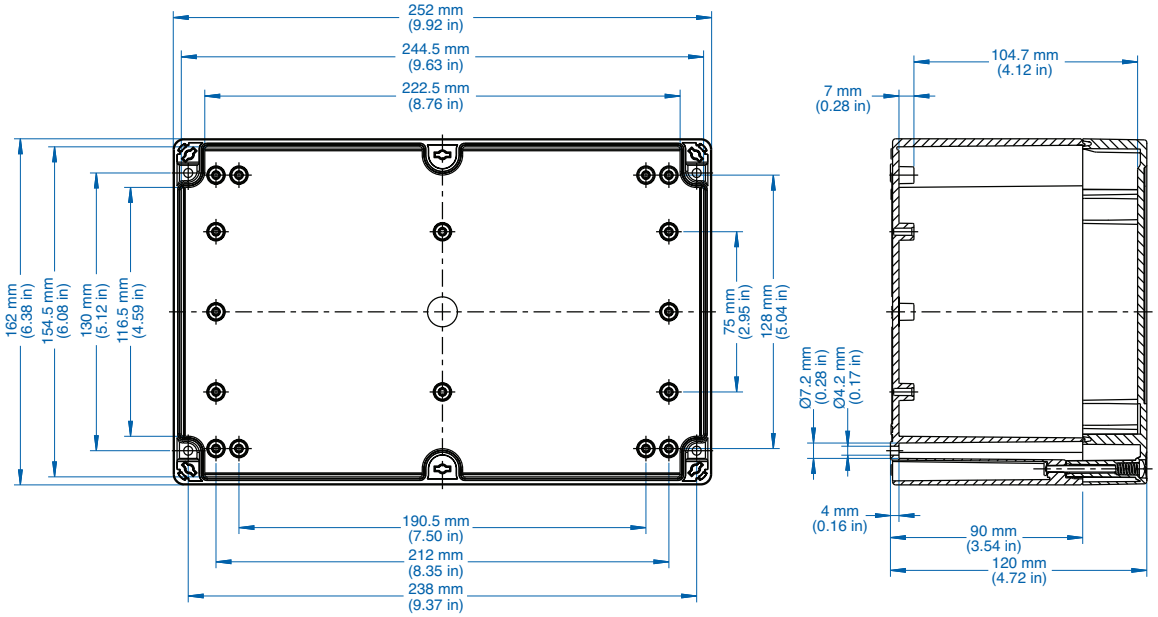

TG3023-9 – ABS and Polycarbonate – 302 x 232 x 90 mm (11.89 x 9.13 x 3.54 in.)

Standard Features

- **Protection Level:** IP67 (NEMA 4X)
- **Technical:** Smooth Sidewalls
  Gray or Transparent Cover
  Standard or Quick Turn Screws
  275 x 205 x 0.4 mm Recess in Cover
  Integrated Cover Retainer
- **UL Recognized Enclosure Materials:** ABS or Polycarbonate
- **Transparent Cover Material:** Polycarbonate
- **Gasket Material:** Polyurethane
- **Color:** Light Gray
- **Material Temperature Range:** ABS
  -40˚C to 80˚C (-40˚F to 176˚F)
  Polycarbonate
  -40˚C to 120˚C (-40˚F to 248˚F)
- **Accessories:** See section below



E254144
Polycarbonate with standard screws Only

TG

Ordering Information	Cat. No. w/ Standard Screws	Cat. No. w/ Quick Turn Screws	Type	Dimensions mm (in) Length	Width	Height	Std. Pk.
ABS							
Gray cover	100-413-91	100-413-01	TGABS3023-9-o	302 mm (11.89 in.)	232 mm (9.13 in.)	90 mm (3.54 in.)	1
Transparent cover	101-013-91	101-013-01	TGABS3023-9-to	302 mm (11.89 in.)	232 mm (9.13 in.)	90 mm (3.54 in.)	1
Polycarbonate							
Gray cover	200-413-91	200-413-01	TGPC3023-9-o	302 mm (11.89 in.)	232 mm (9.13 in.)	90 mm (3.54 in.)	1
Transparent cover	201-013-91	201-013-01	TGPC3023-9-to	302 mm (11.89 in.)	232 mm (9.13 in.)	90 mm (3.54 in.)	1

Accessories

Ordering Information	Cat. No.	Type	Std. Pk.
Mounting Plate (plastic)	186-013	TGMPI-3023	1
Mounting Plate (steel)	187-013	TGMPS-3023	1
DIN Rail – TS35-285	198-285	NS35-285	1
DIN Rail - TS15-285	197-285	TS15-285	1
Internal Hinge Kit Set	182-001	TGISS	1
Mounting Tab Kit	182-002	TGABL	1

Please refer to pages 136-140 additional accessories and detailed information

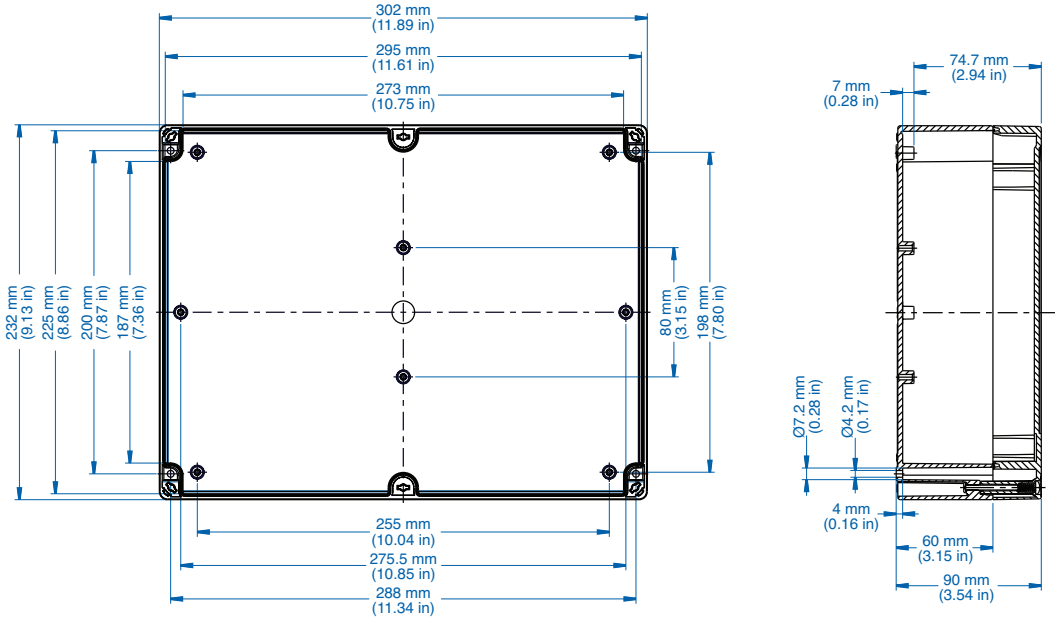

TG3023-11 – ABS and Polycarbonate – 302 x 232 x 110 mm (11.89 x 9.13 x 4.33 in.)

Altech by els spelsberg

Standard Features

- **Protection Level:** IP67 (NEMA 4X)
- **Technical:** Smooth Sidewalls
  Gray or Transparent Cover
  Standard or Quick Turn Screws
  275 x 205 x 0.4 mm Recess in Cover
  Integrated Cover Retainer
- **UL Recognized Enclosure Materials:** ABS or Polycarbonate
- **Transparent Cover Material:** Polycarbonate
- **Gasket Material:** Polyurethane
- **Color:** Light Gray
- **Material Temperature Range:** ABS
  -40˚C to 80˚C (-40˚F to 176˚F)
  Polycarbonate
  -40˚C to 120˚C (-40˚F to 248˚F)
- **Accessories:** See section below



CE cULus E254144
Polycarbonate with standard screws Only

TG

Ordering Information	Cat. No. w/ Standard Screws	Cat. No. w/ Quick Turn Screws	Type	Dimensions mm (in) Length	Width	Height	Std. Pk.
ABS							
Gray cover	100-913-91	100-913-01	TGABS3023-11-o	302 mm (11.89 in.)	232 mm (9.13 in.)	110 mm (4.33 in.)	1
Transparent cover	101-513-91	101-513-01	TGABS3023-11-to	302 mm (11.89 in.)	232 mm (9.13 in.)	110 mm (4.33 in.)	1
Polycarbonate							
Gray cover	200-913-91	200-913-01	TGPC3023-11-o	302 mm (11.89 in.)	232 mm (9.13 in.)	110 mm (4.33 in.)	1
Transparent cover	201-513-91	201-513-01	TGPC3023-11-to	302 mm (11.89 in.)	232 mm (9.13 in.)	110 mm (4.33 in.)	1

Accessories

Ordering Information	Cat. No.	Type	Std. Pk.
Mounting Plate (plastic)	186-013	TGMPI-3023	1
Mounting Plate (steel)	187-013	TGMPS-3023	1
DIN Rail – TS35-285	198-285	NS35-285	1
DIN Rail - TS15-285	197-285	TS15-285	1
Internal Hinge Kit Set	182-001	TGISS	1
Mounting Tab Kit	182-002	TGABL	1

Please refer to pages 136-140 additional accessories and detailed information

