© 2021 TE Connectivity. All Rights Reserved.

REVISIONS					
P	LTR	DESCRIPTION	DATE	DWN	APVD
	A	NEW DRAWING	17FEB2020	GK	IR

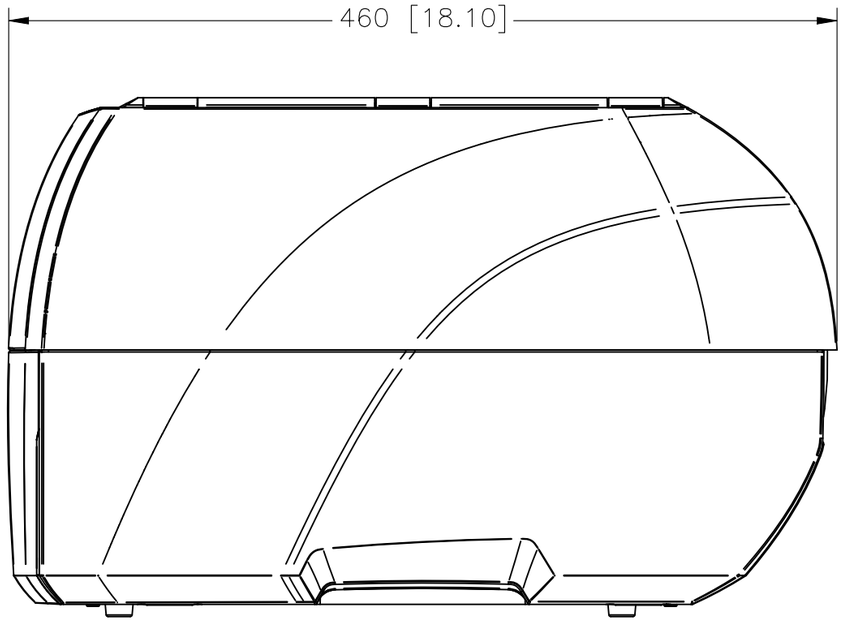

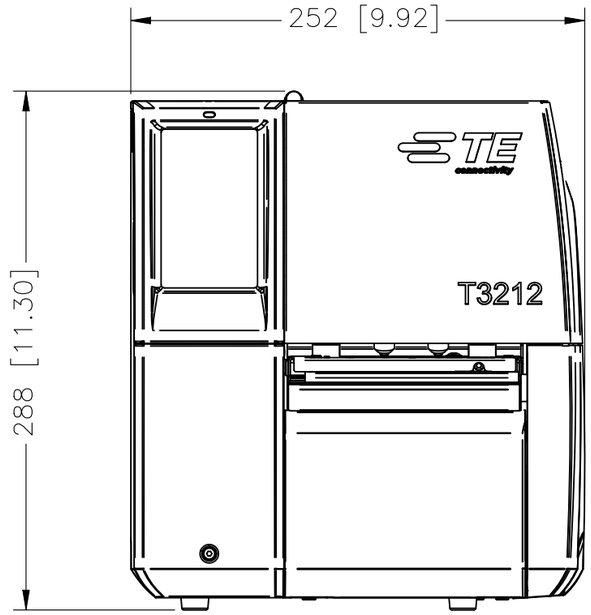

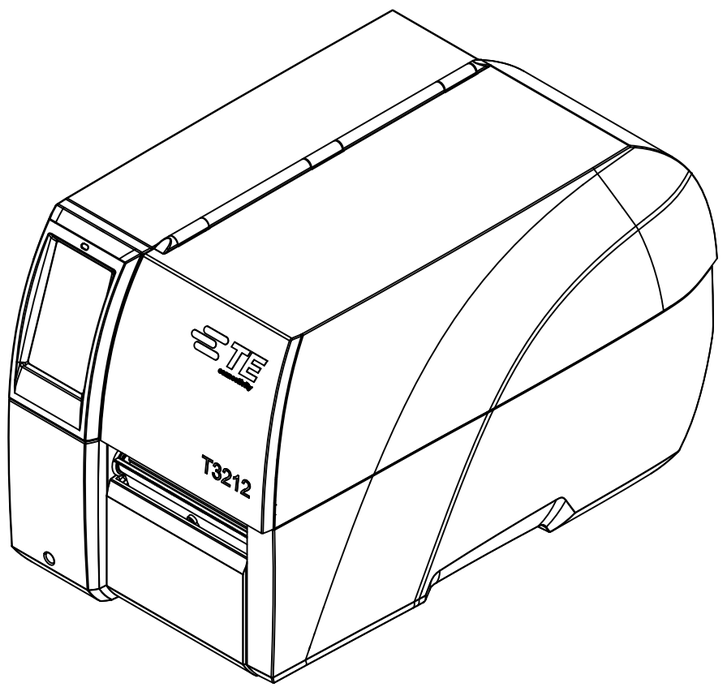

TTDS–274	T3224–SWARE–PRINTER	1–2186503–1
TTDS–274	T3224–PRINTER	1–2186502–1
TTDS–272	T3212–SWARE–PRINTER	1–2186501–1
TTDS–272	T3212–PRINTER	1–2186500–1
TECHNICAL DATA SHEET	TE DESCRIPTION	TE PART NUMBER

THIS DRAWING IS A CONTROLLED DOCUMENT.

DIMENSIONS: mm [INCHES]

TOLERANCES UNLESS OTHERWISE SPECIFIED:
0 PLC ± –
1 PLC ± –
2 PLC ± –
3 PLC ± –
4 PLC ± –
ANGLES ± –

MATERIAL –

FINISH –

DWN GOPALAKRISHNA HV 17FEB2021
CHK IAN RIDGEWAY 17FEB2021
APVD IAN RIDGEWAY 17FEB2021
PRODUCT SPEC SEE TABLE
APPLICATION SPEC —
WEIGHT 10Kg [22lb]

TE Connectivity

NAME
T32XX–PRINTER
–
–

SIZE	CAGE CODE	DRAWING NO	RESTRICTED TO
A3	FB1U7	C–MCD–200022	—

CUSTOMER DRAWING

SCALE	SHEET	REV
6:1	1 OF 1	A

Mouser Electronics

Authorized Distributor

Click to View Pricing, Inventory, Delivery & Lifecycle Information:

TE Connectivity:

1-2186501-1