RoHS Metric OMNI-BLOK® Fuse Block Molded Base Type

The metric Omni-Blok® fuse block, for 5 x 20mm size fuses, is a low profile design that is available with a choice of solder type terminals, NEMA style QC terminals, or PC board mountable terminals. Each of these designs has tin-plated brass terminals. A unique design feature provides self-alignment of the clips to the fuse caps. This feature, plus a one-piece clip/terminal design, assures low contact resistance. An anti-rotation feature is also available on the solder and QC terminal designs.

APPROVALS: Recognized under the Components Program of Underwriters Laboratories and Certified by CSA. VDE and Semko approved.

SPECIFICATIONS:

Electrical:	**UL/CSA**	**VDE/Semko**
Solder Type —	10A, 300V.	6.3A, 250V.
Q.C. Type —	10A, 300V.	6.3A, 250V.
PCB Type —	10A, 300V.	6.3A, 250V.

Dielectric Strength: 1500V., Minimum.
Clip/Terminals: Tin-Plated Spring Brass.
Base: Glass reinforced Thermoplastic, UL 94V0 flammability rating. Gray color (GY) for anti-rotational series, black color for all others.
Ambient Temperature: –40°C to +85°C.

PATENTED

ORDERING INFORMATION:

Catalog Number	Typical Overall Width	Clip/ Terminals	Anti-Rotation Boss
Solder Type Terminals			
520 004	.40"	Brass	No
NEMA Style .110" Q.C. Terminals			
520 003	.40"	Brass	No
520 005-GY	.40"	Brass	Yes
PC Board Mount			
520 101	.40"	Brass	No

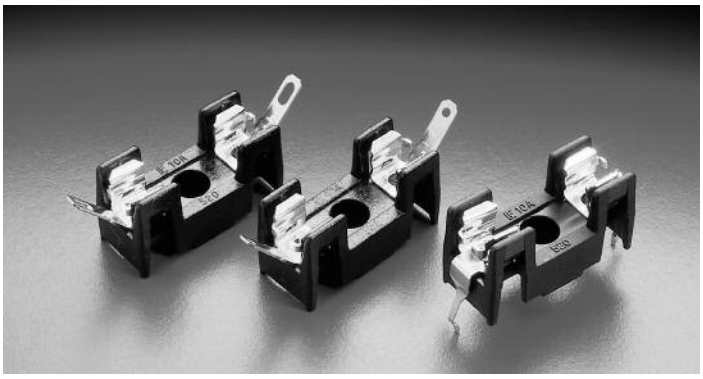

SOLDER TERMINAL TYPES:

520 004

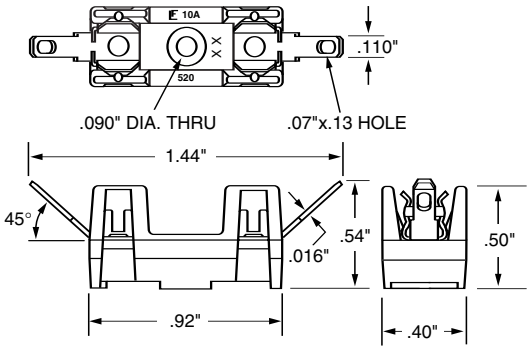

P.C. MOUNT TYPE
520 101

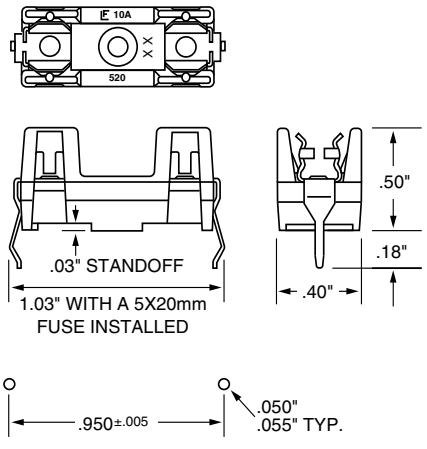

RECOMMENDED HOLE PATTERN

Q.C. TERMINAL TYPES:

520 003

520 005-GY

