3AG Screw Terminal Laminated Base Type

APPROVALS:[1] **356** 000 **Series** (250V) Recognized under the Components Program of Underwriters Laboratories.

SPECIFICATIONS:

Electrical: Rated for currents up to 15 amperes (units with spring brass clips) or up to 30 amperes (beryllium copper clips).

Clips: **356** 000 **Series:** Nickel-plated spring brass.
359 000 **Series:** Silver-plated beryllium copper.

Terminals: 8-32THD screw type.

Base: Black phenolic laminate.

Mounting Hole: 3AG Block: Reference Dimensions .142"/.147" diameter with .295"/.302" x 82°C.S.

REFERENCE DIMENSIONS:

Fuse Type	A	B	C	D	E
3AG	See	2.38"	.25"	.91"	.73"

ORDERING INFORMATION:
(Including Reference Dimensions)

	For 3AG Fuses		
No. of Poles	Dimension "A"	Catalog Number	
1	.78"	**356** 001	**359** 001
2	1.69"	**356** 002	**359** 002
3	2.59"	**356** 003	**359** 003
4	3.50"	**356** 004	**359** 004
5	4.41"	**356** 005	**359** 005
6	5.31"	**356** 006	**359** 006
7	6.21"	**356** 007	**359** 007
8	7.12"	**356** 008	**359** 008
9	8.03"	**356** 009	**359** 009
10	8.94"	**356** 010	**359** 010
11	9.84"	**356** 011	**359** 011
12	10.75"	**356** 012	**359** 012

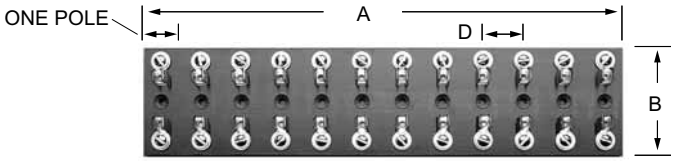

C = Board Thickness E = Overall Height
356 000, **359** 000 and **556** 000 Series

For 1/4" – 13/16" Diameter Fuses Rivet/Eyelet Mount Type

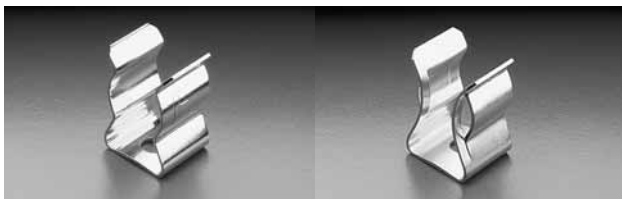

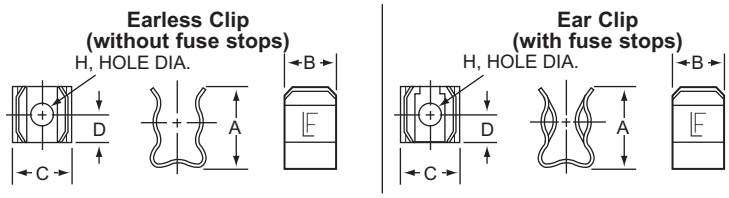

† See Ordering Information below.

For 1/4" Diameter Fuses Rivet/Eyelet Mount Solder Type



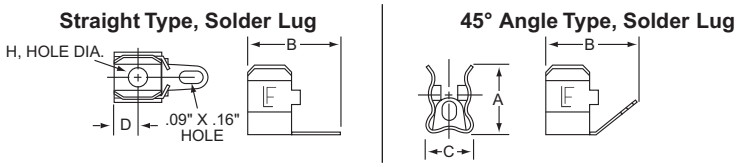

ORDERING INFORMATION:

Style	Fuse Type	Catalog Number: Spring Brass Nickel-plated	Catalog Number: Beryllium Copper Silver-plated	Fuse Diameter	A	B	C	D	H Diameter
† Ear	3AG	**101** 001	**121** 001	1/4"	.48"	.31"	.30"	.16"	.131"
	Midget	**105** 001	**125** 001	13/32"	.75"	.44"	.52"	.22"	.196"
	NEC 1–30 amp	**107** 001	**127** 001	9/16"	.94"	.59"	.65"	.25"	.203"
	NEC 30–60 amp	**109** 001**	**129** 001	13/16"	1.31"	.75"	.87"	.30"	.265"
† Earless	3AG	**101** 002	**121** 002	1/4"	.48"	.31"	.30"	.16"	.131"
	Midget	**105** 002	**125** 002	13/32"	.75"	.44"	.52"	.22"	.196"
	NEC 1–30 amp	**107** 002	**127** 002	9/16"	.94"	.59"	.65"	.25"	.203"
	NEC 30–60 amp	**109** 002**	**129** 002	13/16"	1.31"	.75"	.87"	.30"	.265"
Solder Lug 45°	3AG	**101** 003*	**121** 004	1/4"	.47"	.56"	.31"	.16"	.131"
Solder Lug Straight	3AG	**102** 064*	—	1/4"	.47"	.64"	.31"	.16"	.131"

*Tin-plated **Bare Phos. Bronze

Fuse Blocks and Clips

For 1/4 Diameter Fuses

RoHS Pb Traditional P.C. Board Type

ORDERING INFORMATION:

Catalog Number	Clip Material*	Finish	Style
102 071	Spring Brass	Tin-plated	Ear
102 074	Spring Brass	Tin-plated	Earless
102 076	Spring Brass	Hot Tin	Ear
122 083	Beryllium Copper	Silver-plated	Ear
122 087	Beryllium Copper	Silver-plated	Earless
122 088	Beryllium Copper	Tin-plated	Ear
122 093	Beryllium Copper	Tin-plated	Earless



Nominal Fuse Length	Length "A"
5/8	.750
3/4	.875
7/8	1.000
1	1.125
1 1/16	1.187
1 1/4	1.347
1 7/16	1.562

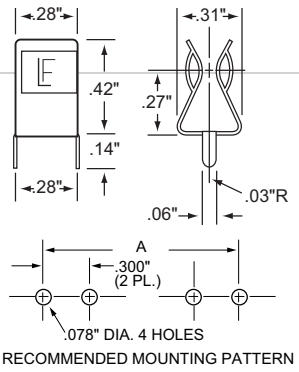

RECOMMENDED MOUNTING PATTERN

RoHS Pb Bowed Tab P.C. Board Type

Catalog Number	Clip Material*	Finish	Style
102 078	Spring Brass	Tin-plated	Earless
102 079	Spring Brass	Tin-plated	Ear



Nominal Fuse Length	Length "A"
5/8	.750
3/4	.875
7/8	1.000
1	1.125
1 1/16	1.187
1 1/4	1.347
1 7/16	1.562

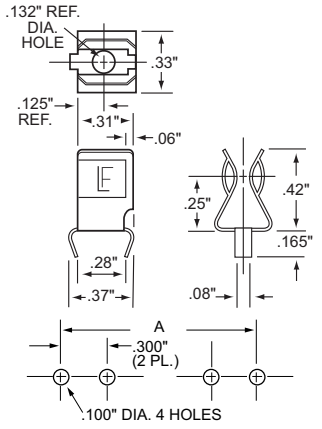

RECOMMENDED MOUNTING PATTERN

RoHS Pb Low Profile P.C. Board Type

Catalog Number	Clip Material*	Finish	Style
102 080	Spring Brass	Tin-plated	Ear
122 090	Beryllium Copper	Silver-plated	Ear



Nominal Fuse Length	Length "A"
5/8	.760
3/4	.880
7/8	1.005
1	1.130
1 1/16	1.195
1 1/4	1.380
1 7/16	1.570

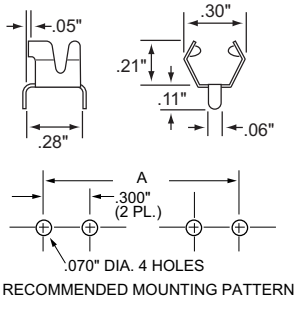

RECOMMENDED MOUNTING PATTERN

RoHS Pb Low Profile P.C. Board Type

Catalog Number	Clip Material*	Finish	Style
100 058	Spring Brass	Tin-plated	Ear

*NOTE: Spring brass clips are suitable for current levels up to 15 amperes; beryllium copper clips up to 30 amperes.

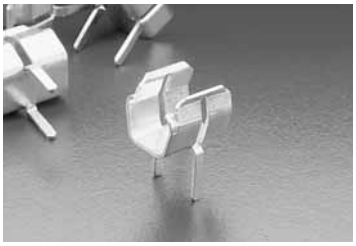

Nominal Fuse Length	Length "A"
1	0.781
1 1/4	1.035
1 7/16	1.250

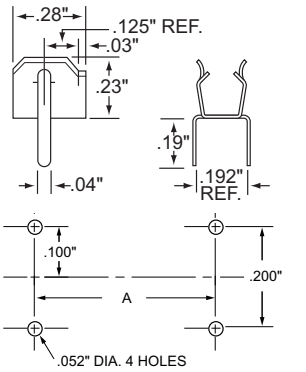

RECOMMENDED MOUNTING PATTERN

Fuse Blocks and Clips

For Various Diameter Fuses

RoHS Pb ATO® Fuse Clip P.C. Board Type

ORDERING INFORMATION:

Catalog Number	Clip Material*	Finish
100 057	Spring Brass	Tin-plated

NOTE: #100 057 spring brass, tin-plated clips available for printed circuit board mounting. Suitable for current levels up to 15 amperes. First time fuse insertion force may approach 40 lbs.



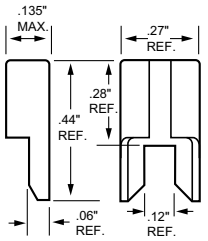

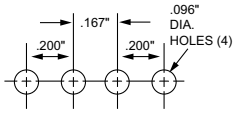

RECOMMENDED MOUNTING PATTERN

RoHS Pb For 2AG or 5mm Diameter Fuses P.C. Board Type

ORDERING INFORMATION:

Catalog Number	Clip Material	Finish	Style
111 501	Spring Brass	Tin-plated	Ear
111 506	Beryllium Copper	Tin-plated	Ear
111 505	Beryllium Copper	Tin-plated	Surface Mount

NOTE: Suitable for current levels up to 10 amperes.
NOTE: Metric dimensions are shown. Inch dimensions are in parentheses.



Table 1	A Dim.
2AG	12.7 (.50")
5x20	17.8 (.70")

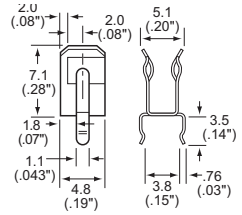

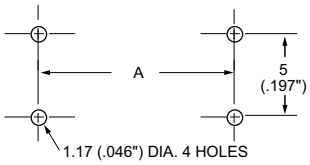

RECOMMENDED MOUNTING PATTERN

RoHS Pb For 5mm Diameter Fuses P.C. Board Type

ORDERING INFORMATION:

Catalog Number	Clip Material	Finish	Style
100 054	Spring Brass	Silver-plated	Ear
100 056	Spring Brass	Tin-plated	Ear

NOTE: Spring brass clips are suitable for current levels up to 10 amperes.
NOTE: Metric dimensions are shown. Inch dimensions are in parentheses.

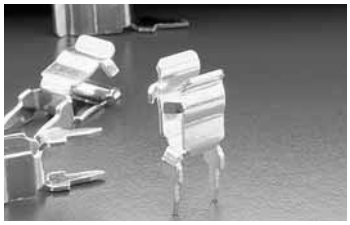

Fuse Size	A Dim.
5mm x 20mm	20.5 (.807")
5mm x 25mm	25.5 (1.004")
5mm x 30mm	31.0 (1.220")

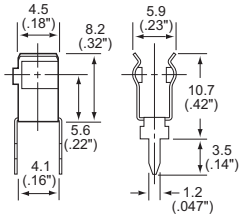

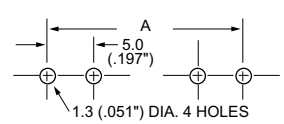

RECOMMENDED MOUNTING PATTERN

RoHS Pb For 5mm Diameter Fuses P.C. Board Type

ORDERING INFORMATION:

Catalog Number	Clip Material	Finish	Style
0445 0001	Spring Brass	Tin-plated	Ear
0030 0210	Spring Brass	Nickel-plated	Ear
0520 0001*	Spring Brass	Silver-plated	Ear

NOTE: Spring brass clips are suitable for current levels up to 10 amperes.
*UL Item is UL Recognized

Fuse Size	A Dim.
5mm x 20mm	20.5 (.807")
5mm x 25mm	25.5 (1.004")
5mm x 30mm	31.0 (1.220")

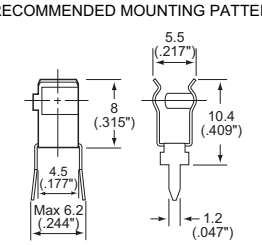

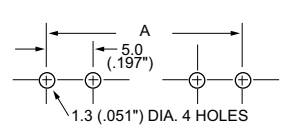

RECOMMENDED MOUNTING PATTERN

RoHS Pb For 5mm Diameter Fuses Automatic Insertion Type

ORDERING INFORMATION:

Catalog Number	Clip Material	Finish	Style
0111 0005MR	Phosphor Bronze	Tin-plated	Ear

Ammo Pack 1000 Pcs.

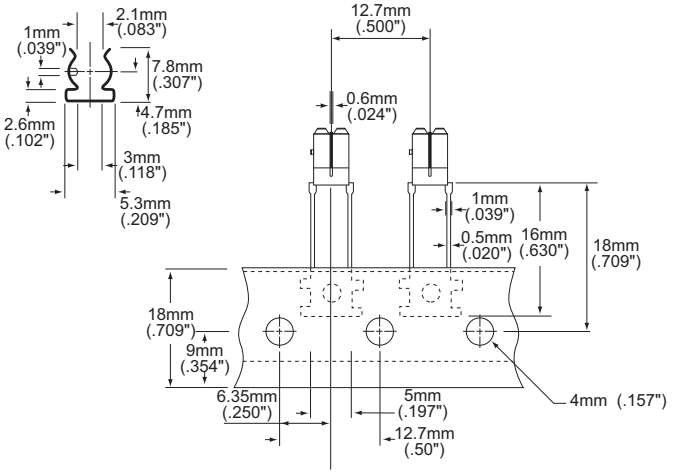

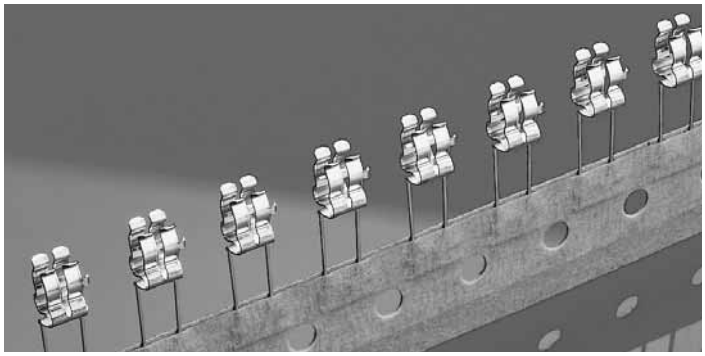

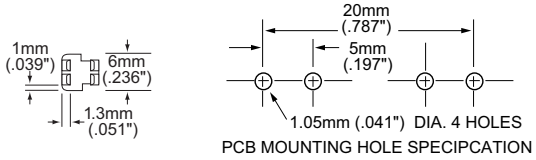

NOTE: #0111 005 phosphor bronze, tin-plated clips designed for automatic insertion are suitable for current levels up to 10 amperes.

RoHS Pb For Midget Fuses (13/32") PC Board Mount

ELECTRICAL SPECIFICATIONS: 15A at 250VAC

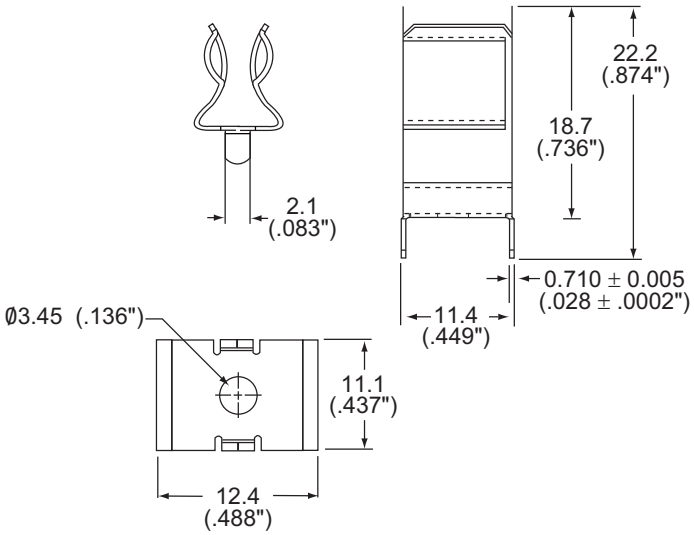



ORDERING INFORMATION:

Catalog Number	Clip Material	Finish	Style	Amp Rating	Voltage Rating
0105 0003	Spring Brass	Tin-plated	Ear	15A	250VAC
0125 0003	Beryllium Copper	Tin-plated	Ear	30A	250VAC