Littelfuse
Expertise Applied | Answers Delivered

354 Series OMNI-BLOK® Molded Base Fuse Block for 3AG Fuses

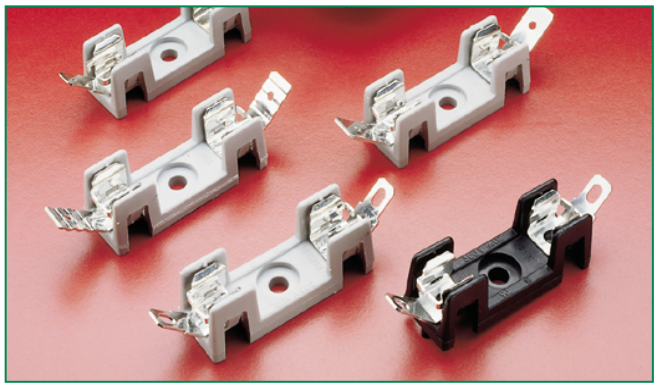

Product & Mounting Dimensions

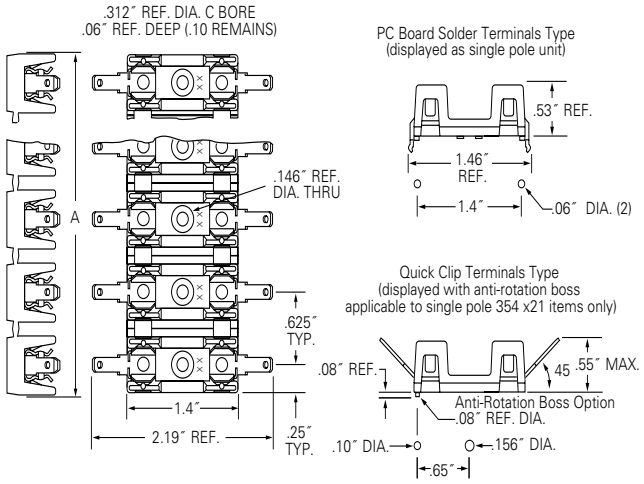

Option

Two different style clips can be supplied for circuit identity or polarization. Contact Littelfuse.

Agency Approval

Series or Catalog Number	Currant Rating
	UL (File No. E14721)
354 000	30A
354 600	20A
354 800	20A
354 900	30A
354 101-GY	15A

*30 amp capability is based on temperature rise with #10 AWG wire properly soldered.

Product Characteristics

Compatible Fuses Size	**3AB/AG**
Description	A low profile fuse block featuring individual barriers which reinforce the fuse clips while providing greater protection against clip damage and electrical shock. The unique design permits self-alignment of clips to fuse cap. This, plus a one-piece clip/terminal assures low contact resistance. Higher currect ratings have been attained using spring brass clips. With the exception of the two-pole unit, multiple pole units may be broken apart to obtain desired number of poles
Dielectric Strength	1500V., Minimum
Clip/Terminals	Tin plated phosphorus bronze except for 354900 series which is tin plated spring brass.
Base	Glass reinforced Thermoplastic. UL 94V0 flammability rating. The standard base color is Gray except for 345 x21 items (single pole products which include anti-rotation boss option) where the standard base color is Black. Refer to the Ordering Information table on the following page for more information.
Ambient Temperature	–40°Cto +85°C

Electrical Information

Series or Catalog Number	Terminals	Rating
354 000	Solder	30A, 300V*
354 600	3/16″ Q.C.	20A, 300V
354 800	1/4″ Q.C.	20A, 300V
354 900	1/4″ Q.C.	30A, 300V
354 101-GY	P.C. Board	15A, 300V

Additional Information

Datasheet | **Resources** | **Samples**

© 2013 Littelfuse, Inc.
Specifications are subject to change without notice.
Revised: 12/19/13

Cartridge Fuse Blocks

Ordering Information

PC Board Solder Terminals		NEMA Style 3/16" Quick Clip Terminals		1/4" Quick Clip Terminals		NEMA Style 1/4" Quick Clip Terminals		Number of Poles	Reference Dimension "A
Ordering No.	Catalog No.	Ordering No.	Catalog No.	Ordering No.	Catalog No.	Ordering No.	Catalog No.		
0354 0001ZXGY	354 001-GY	0354 0601ZXGY	354 601-GY	0354 0801ZXGY	354 801-GY	0354 0901ZXGY	354 901-GY	1	.50"
0354 0002ZXGY	354 002-GY	0354 0602ZXGY	354 602-GY	0354 0802ZXGY	354 802-GY	0354 0902ZXGY	354 902-GY	2	1.12"
0354 0003ZXGY	354 003-GY	0354 0603ZXGY	354 603-GY	0354 0803ZXGY	354 803-GY	0354 0903ZXGY	354 903-GY	3	1.75"
0354 0004ZXGY	354 004-GY	0354 0604ZXGY	354 604-GY	0354 0804ZXGY	354 804-GY	0354 0904ZXGY	354 904-GY	4	2.38"
0354 0005ZXGY	354 005-GY	0354 0605ZXGY	354 605-GY	0354 0805ZXGY	354 805-GY	0354 0905ZXGY	354 905-GY	5	3.00"
0354 0006ZXGY	354 006-GY	0354 0606ZXGY	354 606-GY	0354 0806ZXGY	354 806-GY	0354 0906ZXGY	354 906-GY	6	3.63"
0354 0007ZXGY	354 007-GY	0354 0607ZXGY	354 607-GY	0354 0807ZXGY	354 807-GY	0354 0907ZXGY	354 907-GY	7	4.25"
0354 0008ZXGY	354 008-GY	0354 0608ZXGY	354 608-GY	0354 0808ZXGY	354 808-GY	0354 0908ZXGY	354 908-GY	8	4.88"
0354 0009ZXGY	354 009-GY	0354 0609ZXGY	354 609-GY	0354 0809ZXGY	354 809-GY	0354 0909ZXGY	354 909-GY	9	5.50"
0354 0010ZXGY	354 010-GY	0354 0610ZXGY	354 610-GY	0354 0810ZXGY	354 810-GY	0354 0910ZXGY	354 910-GY	10	6.13"
0354 0011ZXGY	354 011-GY	0354 0611ZXGY	354 611-GY	0354 0811ZXGY	354 811-GY	0354 0911ZXGY	354 911-GY	11	6.75"
0354 0012ZXGY	354 012-GY	0354 0612ZXGY	354 612-GY	0354 0812ZXGY	354 812-GY	0354 0912ZXGY	354 912-GY	12	7.38"
0354 0021ZXBL	354 021-BL*	0354 0621ZXBL	354 621-BL*	0354 0821ZXBL	354 821-BL*	0354 0921ZXBL	354 921-BL*	1	.50"
0354 0101ZXGY	354 101-GY	–	–	–	–	–	–	1	.50"

* With Anti-Rotation Boss

© 2013 Littelfuse, Inc.
Specifications are subject to change without notice.
Revised: 12/19/13