RoHS Traditional Panel Mount Type

QPL

APPROVALS: Recognized under the Components Program of Underwriters Laboratories and Certified by CSA.

SPECIFICATIONS:

Electrical: Rated at 20 amperes for any voltage up to 250 volts.

Dielectric Strength: 2400 volts minimum.

Mounting: Withstands 15 lb.-in. mounting torque; maximum panel thickness: .187".

Molded Parts: Black thermoplastic (UL 94V0).

Knob: Bayonet style with lettering.

Terminals: Copper & copper alloy. Tin plated, except 1/4" Quick-Connect terminals are nickel plated.

Ambient Temperature: –40°C to +85°C.

FUSEHOLDERS TO MIL SPEC:[1] See Military Section.

*** Please refer to Fuseology section for information on proper fuseholder de-rating.**

342 000 **Series**



Knurled knob shown. Fluted knob also available. See table below.

ORDERING INFORMATION:

Catalog Number		
Fluted Knob	Knurled Knob	Type of Terminal
342 014	**342** 012	Solder
342 038	**342** 058	3/16" Q.C.
342 838	**342** 858	1/4" Q.C.

Straight Bottom Terminal

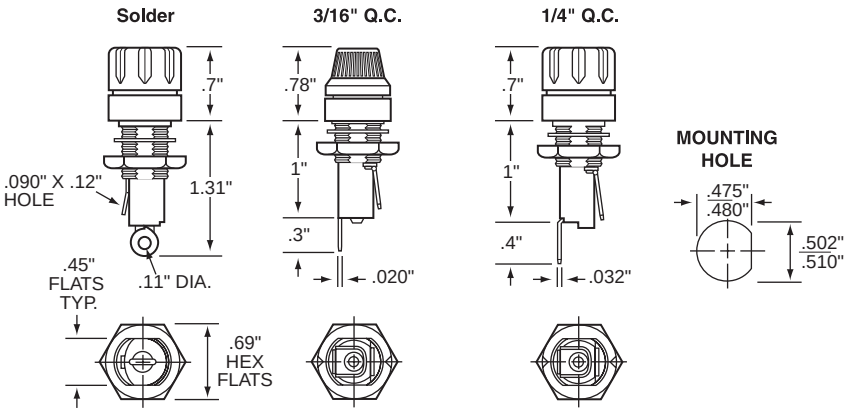

342 000 **Series**



Fluted knob shown. Knurled knob also available. See table below.

ORDERING INFORMATION:

Catalog Number		
Fluted Knob	Knurled Knob	Type of Terminal
342 004	**342** 022	Solder
342 028	**342** 048	3/16" Q.C.
342 828	**342** 848	1/4" Q.C.

Right Angle Terminal

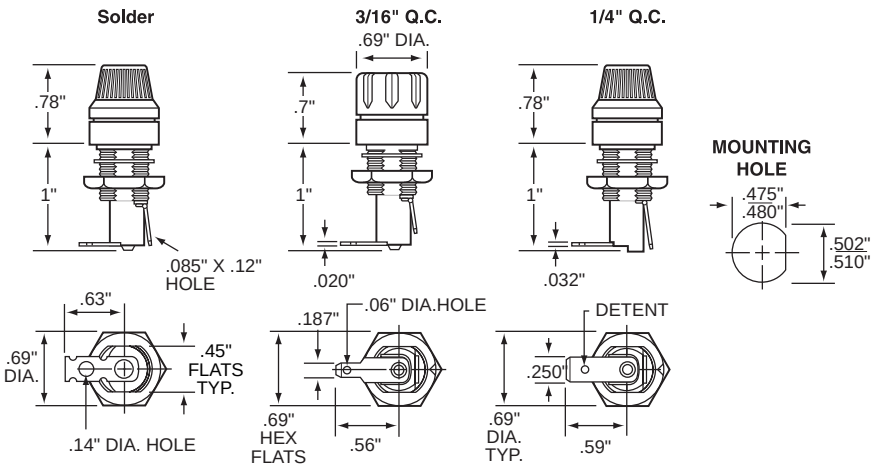

Blown-Fuse Indicating Panel Mount Type

QPL

APPROVALS: Recognized under the Components Program of Underwriters Laboratories and Certified by CSA.

SPECIFICATIONS:

Electrical: Rated at 20 amperes at lamp voltage shown below. Dielectric withstanding voltage exceeds 1500 volts. All fuseholders are supplied with a resistor. When designing indicating type fuseholders into a circuit, consideration should be given to the resistance of fractional amperage fuses and the parallel resistance of the indicator lamp and 7its resistor.

Mounting: Withstands 15 lb.-in. mounting torque. Maximum panel thickness is .250".

Molded Parts: Black Thermoplastic (UL 94V-0), except lens is thermoplastic (UL 94V2). See Table below for lens color.

Knob: Bayonet style.

Terminals: Copper & copper alloy. Tin plated.

Ambient Temperature: –40°C to +85°C.

Hardware: Neoprene washer, lockwasher & hex nut unassembled. O-ring option available must be ordered separately using part numer **901-108**.

FUSEHOLDERS TO MIL SPEC: See Military Section.

*** Please refer to Fuseology section for information on proper fuseholder de-rating.**

ORDERING INFORMATION:

Catalog Number		Voltage Range	Lamp Type	Lamp Current Rating	Lens Color
344 000 Series (Bar Knob)	**344** 400 Series (Round Knob)				
344 006	**344** 401	2.5 to 7	6V Incandescent	.20 amp	Amber
344 012	**344** 402	7 to 16	14V Incandescent	.08 amp	Amber
344 024	**344** 403	16 to 32	28V Incandescent	.04 amp	Amber
344 125	**344** 404	100 to 125	Neon	.002 amp	Clear
344 250	**344** 405	200 to 250	Neon	.002 amp	Clear





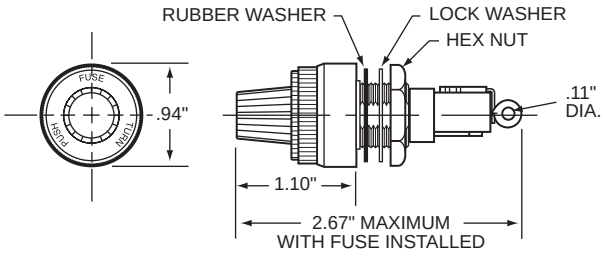

Mounting Hole

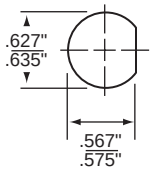

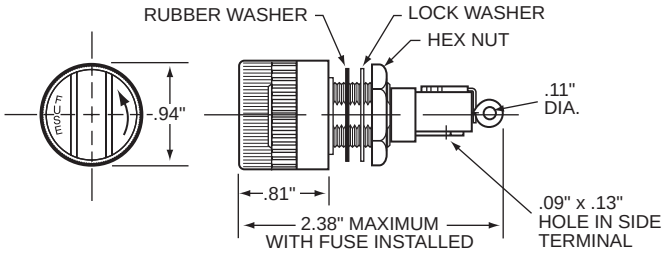

Watertight Panel Mount Type

QPL

APPROVALS: Recognized under the Components Program of Underwriters Laboratories.

SPECIFICATIONS:

Electrical: Rated at 20 amperes for any voltage up to 250 volts.

Dielectric Strength: 1500 volts minimum.

Mounting: Withstands 15 lb.-in. mounting torque; maximum panel thickness is .250".

Molded Parts: Black thermoset (UL 94V0).

Knob: Screw type.

Seal: O-ring provides a watertight seal on the front side of the panel per MIL-PRF-19207.

Terminals: Copper & copper alloy. Tin plated. Solder type.

Ambient Temperature: –40°C to +85°C.

Hardware: O-rings (2) and hex nut, unassembled.

FUSEHOLDERS TO MIL SPEC: See Military Section.

ORDERING INFORMATION:
Catalog Number: 342 006



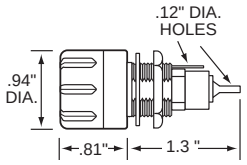

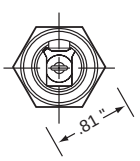

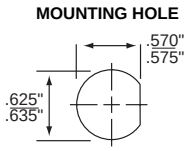

*** Please refer to Fuseology section for information on proper fuseholder de-rating.**

RF Shielded / Watertight Panel Mount Type

QPL

Radio frequency shielded fuseholders eliminate possible transmission or reception of RF signals through the hole in the chassis in which the fuseholder is mounted. These fuseholders comply with the watertight construction requirement of MIL-PRF-19207 and the Shock-Safe requirements of IEC 60065 and 60127-6. A rubber O-ring and conductive gasket maintain RF shielding and watertight construction.

SPECIFICATIONS: The basic fuseholder used is the **345** 603 Shock-Safe holder.

ORDERING INFORMATION:

Catalog Number	Brass Shielding Cap Finish
340 312	Nickel plated
340 313	Dull Black

*** Please refer to Fuseology section for information on proper fuseholder de-rating.**



