## RoHS Traditional Panel Mount Type

QPL

**APPROVALS:** Recognized under the Components Program of Underwriters Laboratories and Certified by CSA.

**SPECIFICATIONS:**

**Electrical:** Rated at 20 amperes for any voltage up to 250 volts.

**Dielectric Strength:** 2400 volts minimum.

**Mounting:** Withstands 15 lb.-in. mounting torque; maximum panel thickness: .187".

**Molded Parts:** Black thermoplastic (UL 94V0).

**Knob:** Bayonet style with lettering.

**Terminals:** Copper & copper alloy. Tin plated, except 1/4" Quick-Connect terminals are nickel plated.

**Ambient Temperature:** –40°C to +85°C.

**FUSEHOLDERS TO MIL SPEC:**[1] See Military Section.

*** Please refer to Fuseology section for information on proper fuseholder de-rating.**

**342** 000 **Series**



Knurled knob shown. Fluted knob also available. See table below.

**ORDERING INFORMATION:**

| Catalog Number | | |
|---|---|---|
| Fluted Knob | Knurled Knob | Type of Terminal |
| **342** 014 | **342** 012 | Solder |
| **342** 038 | **342** 058 | 3/16" Q.C. |
| **342** 838 | **342** 858 | 1/4" Q.C. |

**Straight Bottom Terminal**

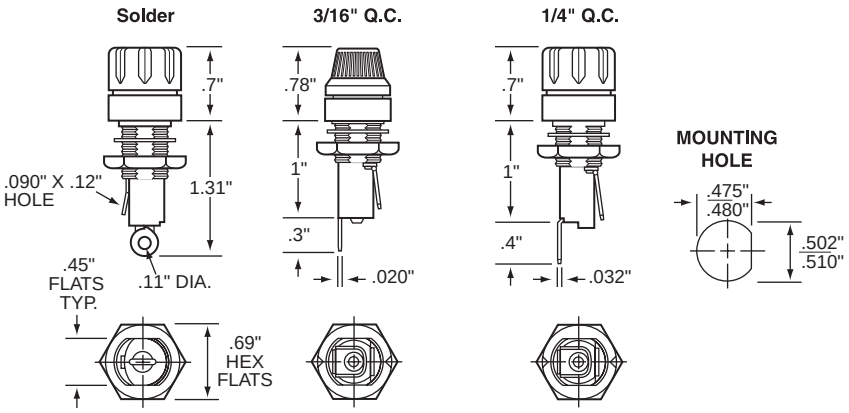


**342** 000 **Series**



Fluted knob shown. Knurled knob also available. See table below.

**ORDERING INFORMATION:**

| Catalog Number | | |
|---|---|---|
| Fluted Knob | Knurled Knob | Type of Terminal |
| **342** 004 | **342** 022 | Solder |
| **342** 028 | **342** 048 | 3/16" Q.C. |
| **342** 828 | **342** 848 | 1/4" Q.C. |

**Right Angle Terminal**

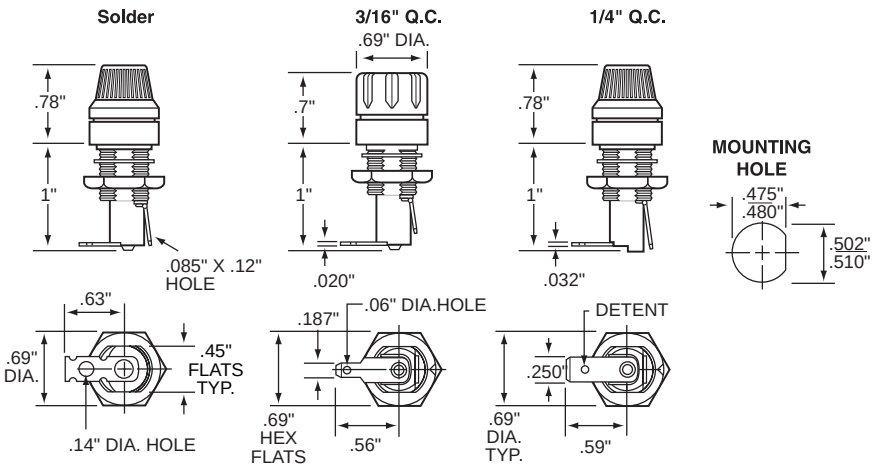

# Blown-Fuse Indicating Panel Mount Type

QPL

**APPROVALS:** Recognized under the Components Program of Underwriters Laboratories and Certified by CSA.

**SPECIFICATIONS:**

**Electrical:** Rated at 20 amperes at lamp voltage shown below. Dielectric withstanding voltage exceeds 1500 volts. All fuseholders are supplied with a resistor. When designing indicating type fuseholders into a circuit, consideration should be given to the resistance of fractional amperage fuses and the parallel resistance of the indicator lamp and 7its resistor.

**Mounting:** Withstands 15 lb.-in. mounting torque. Maximum panel thickness is .250".

**Molded Parts:** Black Thermoplastic (UL 94V-0), except lens is thermoplastic (UL 94V2). See Table below for lens color.

**Knob:** Bayonet style.

**Terminals:** Copper & copper alloy. Tin plated.

**Ambient Temperature:** –40°C to +85°C.

**Hardware:** Neoprene washer, lockwasher & hex nut unassembled. O-ring option available must be ordered separately using part numer **901-108**.

**FUSEHOLDERS TO MIL SPEC:** See Military Section.

*** Please refer to Fuseology section for information on proper fuseholder de-rating.**

**ORDERING INFORMATION:**

| Catalog Number | | Voltage Range | Lamp Type | Lamp Current Rating | Lens Color |
|---|---|---|---|---|---|
| **344** 000 Series (Bar Knob) | **344** 400 Series (Round Knob) | | | | |
| **344** 006 | **344** 401 | 2.5 to 7 | 6V Incandescent | .20 amp | Amber |
| **344** 012 | **344** 402 | 7 to 16 | 14V Incandescent | .08 amp | Amber |
| **344** 024 | **344** 403 | 16 to 32 | 28V Incandescent | .04 amp | Amber |
| **344** 125 | **344** 404 | 100 to 125 | Neon | .002 amp | Clear |
| **344** 250 | **344** 405 | 200 to 250 | Neon | .002 amp | Clear |







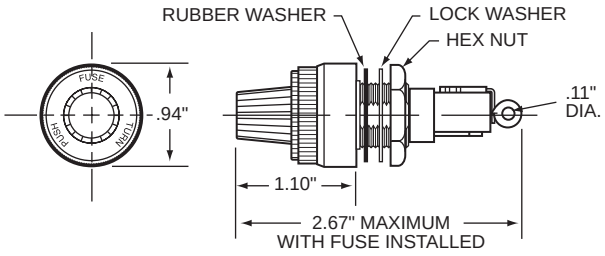


**Mounting Hole**

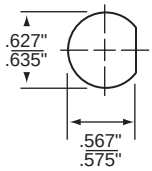


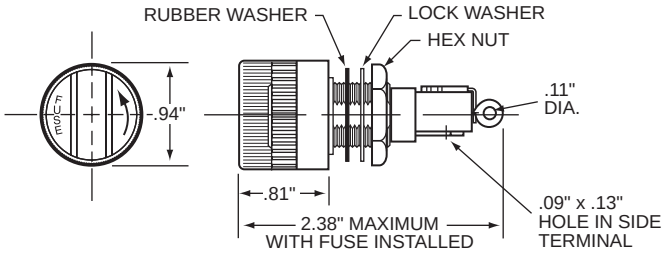

## Watertight Panel Mount Type

QPL

**APPROVALS:** Recognized under the Components Program of Underwriters Laboratories.

**SPECIFICATIONS:**

**Electrical:** Rated at 20 amperes for any voltage up to 250 volts.

**Dielectric Strength:** 1500 volts minimum.

**Mounting:** Withstands 15 lb.-in. mounting torque; maximum panel thickness is .250".

**Molded Parts:** Black thermoset (UL 94V0).

**Knob:** Screw type.

**Seal:** O-ring provides a watertight seal on the front side of the panel per MIL-PRF-19207.

**Terminals:** Copper & copper alloy. Tin plated. Solder type.

**Ambient Temperature:** –40°C to +85°C.

**Hardware:** O-rings (2) and hex nut, unassembled.

**FUSEHOLDERS TO MIL SPEC:** See Military Section.

**ORDERING INFORMATION:**
**Catalog Number: 342** 006



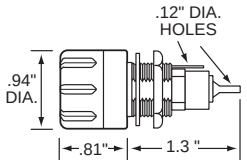


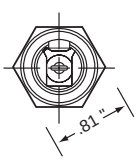


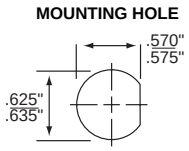


*** Please refer to Fuseology section for information on proper fuseholder de-rating.**

## RF Shielded / Watertight Panel Mount Type

QPL

Radio frequency shielded fuseholders eliminate possible transmission or reception of RF signals through the hole in the chassis in which the fuseholder is mounted. These fuseholders comply with the watertight construction requirement of MIL-PRF-19207 and the Shock-Safe requirements of IEC 60065 and 60127-6. A rubber O-ring and conductive gasket maintain RF shielding and watertight construction.

**SPECIFICATIONS:** The basic fuseholder used is the **345** 603 Shock-Safe holder.

**ORDERING INFORMATION:**

| Catalog Number | Brass Shielding Cap Finish |
|---|---|
| **340** 312 | Nickel plated |
| **340** 313 | Dull Black |

*** Please refer to Fuseology section for information on proper fuseholder de-rating.**




