286/346 Series Flip-Top Shock-Safe Panel Mount Fuseholders

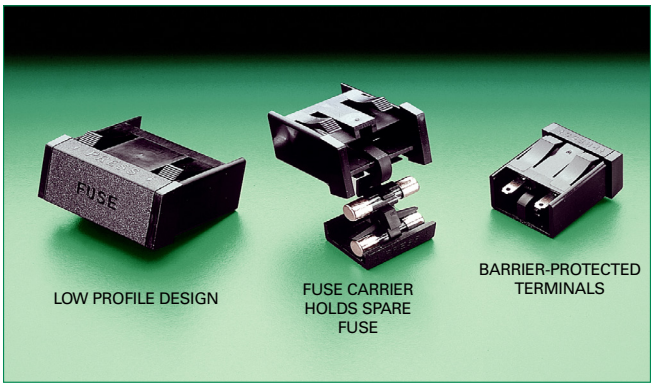

Agency Approvals

Agency	Agency File/Certificate Number
	E14721
	7316

Refer to Fuseology for information on proper fuseholder re-rating.

Dimensions

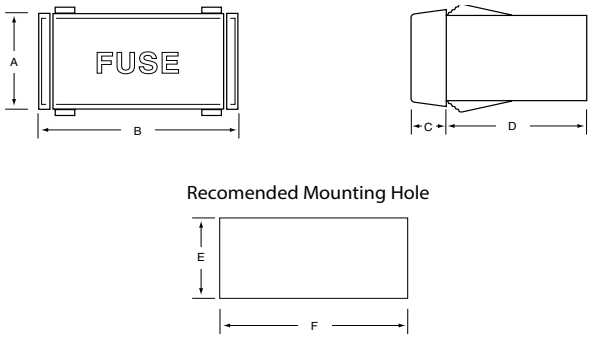

Product Characteristics

Compatible Fuses	**For 3AG, 3AB, 5x20mm, or 2AG Fuses**
Features	• Shock-Safe design eliminates any possibility of electrical shock, per IEC Standards IEC 60127-6. • Fuse carrier holds spare fuse for fast, easy fuse replacement and convenient servicing. • Low profile design
Electrical	Rating: See ordering information table. Insulation Resistance:10,000 megohm minimum at 500 VDC. Contact Resistance: Less than 0.01 ohm.
Mounting	Snap-in mounting. No hardware required. Panel thickness range: .032" through .125".
Molded Parts	Thermoplastic (UL94 V-0) black standard (other colors available as special).
Fuse Carrier	Spring-loaded. Unlocks with a press of the finger. Locks into place to prevent accidental circuit interruption. Permanently attached to fuseholder body to prevent loss. Extracts fuse from live terminals. Holds spare fuse.
Terminals	Copper alloy, tin plate. Accepts quick-connect or solder.
Ambient Temperature	–40 °C to +85 °C.
Vibration	10-55-10 Hz at .06" double amplitude (Method 201, MIL-STD-202).

Additional Information

Datasheet 286 Series | **Resources 286 Series** | **Samples 286 Series**

Datasheet 346 Series | **Resources 346 Series** | **Samples 346 Series**

Ordering Information

Catalog Number	Fuse Size	Q.C. Terminals	Max. Amps At 250V.	A	B	C	D	E +.005"/-.000"	F +.005"/-.000"	Packaging
03460877H	3AG/3AB	.250" × .032" .072" Dia. Hole	15	.75"	1.5"	.27"	1.04"	.688"	1.445"	Bulk (100 Pieces)
03460877Z										Bulk (1 Piece)
02860677H	5 × 20mm	.187" × .032" .055" Dia. Hole	10	.70"	1.03"	.26"	.94"	.625"	.953"	Bulk (100 Pieces)
02860677Z										Bulk (1 Piece)
02860377H	2AG	.110" × .020" .048" Dia. Hole	10	.61"	.85"	.20"	.87"	.550"	.775"	Bulk (100 Pieces)
02860377Z										Bulk (1 Piece)

Disclaimer Notice - Information furnished is believed to be accurate and reliable. However, users should independently evaluate the suitability of and test each product selected for their own applications. Littelfuse products are not designed for, and may not be used in, all applications. Read complete Disclaimer Notice at: www.littelfuse.com/disclaimer-electronics.

© 2021 Littelfuse, Inc.
Application testing is strongly reçommended.: are subject to change without notice.
Revised: June 9, 2021 1:48 PM