PART NAME: CASE	SCALE: 1:1	DATE: 10/7/92	DR. BY HD

THIS DRAWING IS THE PROPERTY OF DAVIES MOLDING COMPANY, IS SUBMITTED SOLELY AS A DESIGN OR ENGINEERING PROJECT. WE ACCEPT NO RESPONSIBILITY WHATSOEVER FOR THE PRACTICAL APPLICATION OF THE PIECES MADE TO THIS DESIGN.

DAVIES MOLDING COMPANY

CAROL STREAM, ILLINOIS 60188

P/N 0250

M NO.

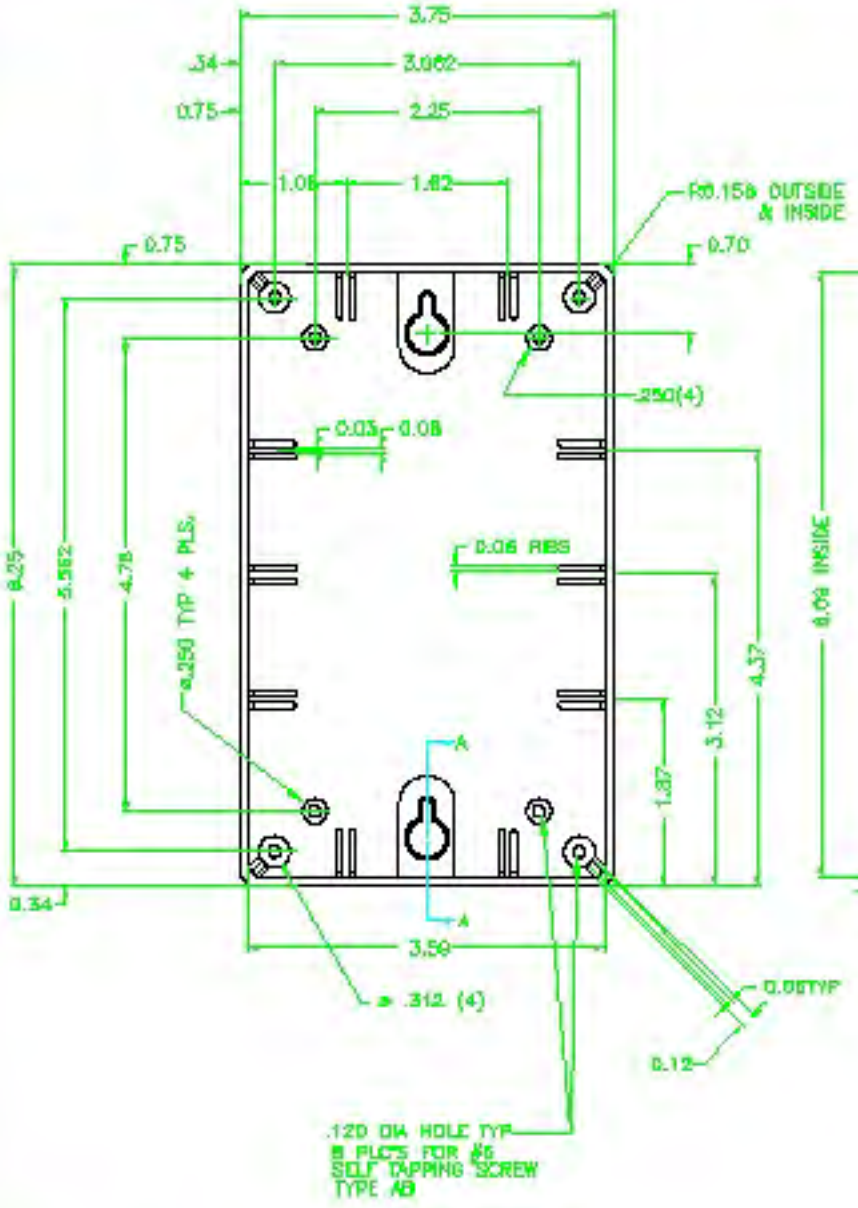

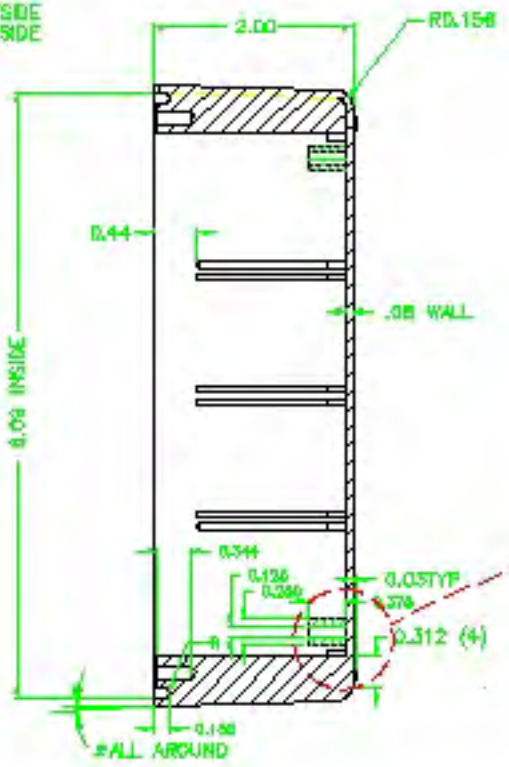

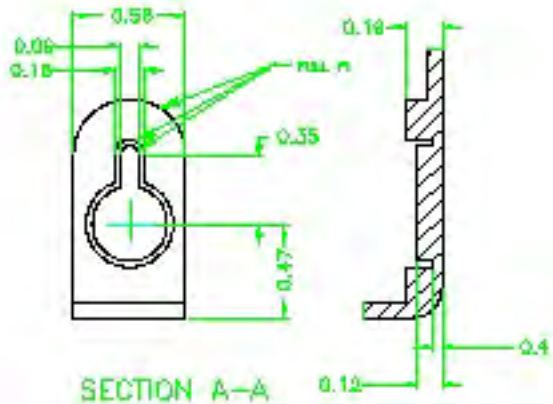

SECTION A-A
SCALE 2:1

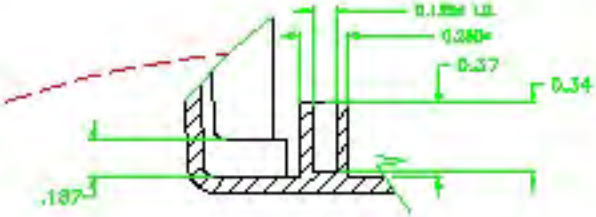

SCALE 2:1

MATERIAL : ABS
COLOR :BLACK

TOLERANCES: UNLESS OTHERWISE SPECIFIED	DO NOT SCALE DRAWING
DECIMALS: X.XXX ± .005 X.XX ± .015	MM: X.XX ± 0.15MM X.X ± 0.4MM
FRACTIONS ± 1/64	ANG. ± 1°

CHANGES

Mouser Electronics

Authorized Distributor

Click to View Pricing, Inventory, Delivery & Lifecycle Information:

Davies Molding:

0250